DH362NRK Safety Switch

1.1 Safety Switches

Product Overview V2-T1-2
Cross-Reference V2-T1-3
Catalog Number Selection V2-T1-11
Options and Accessories V2-T1-13
Modifications—Flex Center V2-T1-15
Technical Data and Specifications V2-T1-16
Short-Circuit Ratings of Non-Fusible Switches V2-T1-21
Dimensions V2-T1-23
General-Duty V2-T1-25
Heavy-Duty V2-T1-30
Heavy-Duty Double Door Safety Switch V2-T1-39
Six-Pole Switches V2-T1-43
Double-Throw Switches V2-T1-46
EnviroLine Stainless Steel Switch V2-T1-53
Window Switches V2-T1-57
Receptacle Switches V2-T1-60
Non-Metallic KRYDON Switch V2-T1-62
Shunt Trip Safety Switch V2-T1-65
NEMA 7/9—Hazardous Location Disconnect Switch V2-T1-68
Quick-Connect Switches V2-T1-70
Solar Disconnect Switch V2-T1-75
Mill-Duty Rated, Heavy-Duty Safety Switch V2-T1-77
Elevator Control Switch V2-T1-79
Auxiliary Power Heavy-Duty Safety Switch V2-T1-82
Left-Handed Safety Switch V2-T1-86
Heavy-Duty Surge Switch V2-T1-87
OEM Line Isolation (OLI) Switch V2-T1-89
Pringle Bolted Pressure Switch V2-T1-92
Type DS, Fusible and Non-Fusible V2-T1-95
Type Visi-Flex DE-ION V2-T1-98
Flange Mounted—Variable Depth V2-T1-102
Flange Mounted—Fixed Depth V2-T1-106

1.2 Enclosed Circuit Breakers

Enclosed Circuit Breakers—Power Defense V2-T1-108
Features V2-T1-109
Standards and Certifications V2-T1-109
Catalog Number Selection V2-T1-110
Product Selection V2-T1-111
Dimensions V2-T1-113
Enclosed Circuit Breaker (ECB) with Arcflash Reduction Maintenance System V2-T1-115
Product Selection V2-T1-116
Wiring Diagram V2-T1-117
Dimensions V2-T1-118
Flex Center V2-T1-119

1.3 Enclosed Rotary Disconnects

Product Overview V2-T1-120
Product Selection V2-T1-121
Dimensions V2-T1-122

Supplied by Digital Stout Innovation & Trading FZE

1

Product Overview

Product Selection Guide

Safety Switch

Switch Type	NEMA Rating	Fused/non-fused	Number of Poles 1	2	3	4	6
Heavy-duty single-throw	NEMA 1	Fused and non-fused ①	—	30–800 A	30–1200 A	30–600 A	—
	NEMA 3R	Fused and non-fused ②	30–600 A	30–800 A	30–1200 A	—	—
	NEMA 12/3R	Fused and non-fused ①②	30–600 A	30–800 A	30–1200 A	30–600 A	30–200 A
	NEMA 4	Fused and non-fused	—	400–800 A	400–800 A	—	—
	NEMA 7/9	Fused and non-fused ③	—	—	30–100 A	—	—
	NEMA 4X non-metallic	Fused and non-fused ③	—	—	30–200 A	—	—
	NEMA 4X stainless-steel (304 or 316 Grade)	Fused and non-fused ①②	30–600 A	30–800 A	30–1200 A	30–600 A	30–200 A
General-duty single-throw	NEMA 1 and 3R	Fused	—	30–600 A	30–600 A	—	—
	NEMA 1	Non-fused	—	30–100 A	30–600 A	—	—
	NEMA 3R	Non-fused	—	30–200 A	30–600 A	—	—
Heavy-duty double-throw	NEMA 1	Fused	—	200 A	30–1200 A	—	—
	NEMA 3R	Fused ④	—	200 A	100–1200 A	—	—
	NEMA 12	Fused	—	—	30–400 A	—	—
	NEMA 4X stainless-steel (304 or 316 Grade)	Fused	—	—	30–400 A	—	—
	NEMA 1	Non-fused	—	30–1200 A	30–1200 A	200–800 A	—
	NEMA 3R	Non-fused ④	—	200–1200 A	30–1200 A	30–800 A	30–100 A
	NEMA 12	Non-fused	—	—	30–800 A	—	—
	NEMA 4X stainless-steel (304 or 316 Grade)	Non-fused	—	—	30–800 A	—	—
General-duty double-throw	NEMA 3R	Non-fused	—	30–400 A	—	—	—
Shunt trip safety switches	NEMA 12/3R, 4, 4X stainless steel (304 or 316 stainless steel)	Fused and non-fused	—	30–1200 A	30–1200 A	30–400 A	—
Window switches	NEMA 12/3R and 4X stainless-steel (304 or 316 Grade)	Fused and non-fused ①	—	30–1200 A	30–1200 A	30–600 A	30–200 A
Enviroline stainless-steel switch	NEMA 4X (304 or 316-Grade)	Fused and non-fused ⑤	—	30–400 A	30–400 A	—	—
Mill duty switches	NEMA 12/3R and 4X stainless-steel (304 or 316 Grade)	Fused and non-fused	—	30–600 A	30–600 A	—	—
Quick connect double-throw	NEMA 1 and 3R	Fused and non-fused ④	—	100–1200 A	100–1200 A	100–1200 A	—
Quick connect single-throw	NEMA 1 and 3R	Fused and non-fused ④	—	100–1200 A	100–1200 A	100–1200 A	—
Elevator control switches	NEMA 1, 3R, 4, and 12	Fused	—	—	30–400 A	—	—
OEM Line Isolation Switches (OLI)	NEMA 12/3R and 4X stainless-steel (304 or 316 Grade)	Fused and non-fused	—	30–400 A	30–400 A	—	—
Receptacle switches	NEMA 12/3R and 4X stainless-steel (304 or 316 Grade)	Fused and non-fused ⑥	—	—	30–100 A	—	—
Auxiliary power switch	NEMA 3R	Fused and non-fused ④	—	—	30–200 A	—	—
Left-handed switches	NEMA 1, 3R, 12, and 4X stainless-steel (304 or 316 Grade)	Fused and non-fused ⑦	—	—	30–200 A	—	—
Surge switches	NEMA 12/3R and 4X stainless-steel (304 or 316 Grade)	Fused and non-fused	—	30–1200 A	30–1200 A	—	—
Heavy-duty double door	NEMA 12/3R and 4X stainless-steel (304 or 316 Grade)	Fused	—	30–1200 A	30–1200 A	—	—
Enclosed rotary	NEMA 1, 12/3R, NEMA 4X stainless-steel	Non-fused	—	—	16–80 A	16–80 A	—
	NEMA 4X non-metallic	Non-fused	—	—	16–80 A	16–80 A	—
	NEMA 4X polycarbonate non-metallic	Non-fused	—	—	30 A and 60 A	16–80 A	—

Notes

① 400–800 A 6-pole, and 800 A four-pole heavy-duty, single-throw switches are non-UL Listed and available.

② Single-pole product is the single circuit 600 Vdc switch series.

③ No viewing windows or other enclosure modifications are available with this product.

④ NEMA 3R stainless versions are available and are UL Listed.

⑤ Enviroline stainless-steel switches have stainless-steel enclosures, sub pans, handles, and mechanisms.

⑥ Switches with non-standard receptacles or at higher amperages are non-UL Listed and available.

⑦ All left-handed switches are non-UL Listed. Higher amperages are not available.

Supplied by Digital Stout Innovation & Trading FZE

Cross-Reference

General-Duty

Ampere Rating	Catalog Number Eaton	General Electric	Siemens	Square D
Fusible, Two-Pole, Three-Wire, 240 Vac, NEMA 1				
30	**DG221NGB**	TG3221	GF221N	D221N
60	**DG222NGB**	TG3222	GF222N	D222N
100	**DG223NGB**	TG3223	GF223N	D223N
200	**DG224NGK**	TG3224	GF224N	D224N
400	**DG225NGK**	TG3225	GF225N	D225N
600	**DG226NGK**	TG3226	GF226N	D226N
Fusible, Three-Pole, Three-Wire, 240 Vac, NEMA 1				
30	**DG321FGB**	TG4321	GF321N	D321N
60	**DG322FGB**	TG4322	GF322N	D322N
100	**DG323FGB**	TG4323	GF323N	D323N
200	**DG324FGK**	TG4324	GF324N	D324N
400	**DG325FGK**	TG3325	GF325N	D325N
600	**DG326FGK**	TG3326	GF326N	D326N
Fusible, Three-Pole, Four-Wire, 240 Vac, NEMA 1				
30	**DG321NGB**	TG4321	GF321N	D321N
60	**DG322NGB**	TG4322	GF322N	D322N
100	**DG323NGB**	TG4323	GF323N	D323N
200	**DG324NGK**	TG4324	GF324N	D324N
400	**DG325NGK**	TG4325	GF325N	D325N
600	**DG326NGK**	TG4326	GF326N	D326N
Non-Fusible, Two-Pole, Two-Wire, 240 Vac, NEMA 1				
30	**DG221UGB**	TGN3321	N/A	N/A
60	**DG222UGB**	TGN3322	N/A	QO260NATS
100	**DG223UGB**	TGN3323	N/A	QO2000NS
200	**DG324UGK**	TGN3324	N/A	DU324
400	**DG325UGK**	TGN3325	N/A	DU325
600	**DG326UGK**	TGN3326	N/A	DU326
Non-Fusible, Three-Pole, Three-Wire, 240 Vac, NEMA 1				
30	**DG321UGB**	TGN3321	GNF321	DU321
60	**DG322UGB**	TGN3322	GNF322	DU322
100	**DG323UGB**	TGN3323	GNF323	DU323
200	**DG324UGK**	TGN3324	GNF324	DU324
400	**DG325UGK**	TGN3325	GNF325	DU325
600	**DG326UGK**	TGN3326	GNF326	DU326

General-Duty, continued

Ampere Rating	Catalog Number Eaton	General Electric	Siemens	Square D
Fusible, Two-Pole, Three-Wire, 240 Vac, NEMA 3R				
30	**DG221NRB**	TG3221R	GF221NR	D221NRB
60	**DG222NRB**	TG3222R	GF222NR	D222NRB
100	**DG223NRB**	TG3223R	GF223NR	D223NRB
200	**DG224NRK**	TG3224R	GF224NR	D224NRB
400	**DG225NRK**	TG3225R	GF225NR	D225NR
600	**DG226NRK**	TG3226R	GF226NR	D226NR
Fusible, Three-Pole, Three-Wire, 240 Vac, NEMA 3R				
30	**DG321FRB**	TG4321R	GF321NR	D321NRB
60	**DG322FRB**	TG4322R	GF322NR	D322NRB
100	**DG323FRB**	TG4323R	GF323NR	D323NRB
200	**DG324FRK**	TG4324R	GF324NR	D324NRB
400	**DG325FRK**	TG3325R	GF325NR	D325NR
600	**DG326FRK**	TG3326R	GF326NR	D326NR
Fusible, Three-Pole, Four-Wire, 240 Vac, NEMA 3R				
30	**DG321NRB**	TG4321R	GF321NR	D321NRB
60	**DG322NRB**	TG4322R	GF322NR	D322NRB
100	**DG323NRB**	TG4323R	GF323NR	D323NRB
200	**DG324NRK**	TG4324R	GF324NR	D324NRB
400	**DG325NRK**	TG3325R ①	GF325NR	D325NR
600	**DG326NRK**	TG3326R ①	GF326NR	D326NR
Non-Fusible, Two-Pole, Two-Wire, 240 Vac, NEMA 3R				
30	**DG221URB**	TGN3321R	GNF321R	DU221RB
60	**DG222URB**	TGN3322R	GNF322R	DU222RB
100	**DG223URB**	TGN3323R	GNF323R	QO2000NRB
200	**DG324URK**	TGN3324R	GNF324R	DU324RB
Non-Fusible, Three-Pole, Three-Wire, 240 Vac, NEMA 3R				
30	**DG321URB**	TGN3321R	GNF321R	DU321RB
60	**DG322URB**	TGN3322R	GNF322R	DU322RB
100	**DG323URB**	TGN3323R	GNF323R	DU323RB
200	**DG324URK**	TGN3324R	GNF324R	DU324RB
400	**DG325URK**	N/A	N/A	N/A
600	**DG326URK**	N/A	N/A	N/A

Notes

① Separate neutral kit required.

Always verify the number of poles and wires required since catalog numbers may appear in multiple tables.

Supplied by Digital Stout Innovation & Trading FZE

Heavy-Duty

Ampere Rating	Catalog Number Eaton	General Electric	Siemens	Square D
Fusible, Two-Pole, Two-Wire, 240 Vac, NEMA 1				
30	**DH221FGK**	TH3221	N/A	H221N
60	**DH222FGK**	TH3222	N/A	H222N
100	**DH223FGK**	TH3223	N/A	H223N
200	**DH224FGK**	TH3224	N/A	H224N
400	**DH225FGK**	TH3225	N/A	H225
600	**DH226FGK**	TH3226	N/A	H226
800	**DH227FGK**	TC72267	N/A	H227
1200	**DH328FGK**	TC72268	N/A	H228
Fusible, Two-Pole, Three-Wire, 240 Vac, NEMA 1				
30	**DH221NGK**	TH3221	HF221N	H221N
60	**DH222NGK**	TH3222	HF222N	H222N
100	**DH223NGK**	TH3223	HF223N	H223N
200	**DH224NGK**	TH3224	HF224N	H224N
400	**DH225NGK**	TH3225	HF225N	H225N
600	**DH226NGK**	TH3226	HF226N	H226N
800	**DH227NGK**	TC72267 ①	HF227N	H227N
1200	**DH328NGK**	TC72268 ①	HF228N	H228N
Fusible, Three-Pole, Three-Wire, 240 Vac, NEMA 1				
30	**DH321FGK**	TH4321	N/A	H321N
60	**DH322FGK**	TH4322	N/A	H322N
100	**DH323FGK**	TH4323	N/A	H323N
200	**DH324FGK**	TH4324	N/A	H324N
400	**DH325FGK**	TH3325	N/A	H325
600	**DH326FGK**	TH3326	N/A	H326
800	**DH327FGK**	TC72367	N/A	H327
1200	**DH328FGK**	TC72368	N/A	H328
Fusible, Three-Pole, Four-Wire, 240 Vac, NEMA 1				
30	**DH321NGK**	TH4321	HF321N	H321N
60	**DH322NGK**	TH4322	HF322N	H322N
100	**DH323NGK**	TH4323	HF323N	H323N
200	**DH324NGK**	TH4324	HF324N	H324N
400	**DH325NGK**	TH4325	HF325N	H325N
600	**DH326NGK**	TH4326	HF326N	H326N
800	**DH327NGK**	TC72367 ①	HF327N	H327N
1200	**DH328NGK**	TC72368 ①	HF328N	H328N
Fusible, Four-Pole, Four-Wire, 240 Vac, NEMA 1				
30	**DH421FGK**	N/A	F421	H461 ②
60	**DH422FGK**	N/A	F422	H462 ②
100	**DH423FGK**	N/A	F423	H463 ②
200	**DH424FGK**	N/A	F424	H464 ②
400	**DH425FGK**	N/A	F425	H465 ②
600	**DH426FGK**	N/A	F426	H466 ②

Heavy-Duty, continued

Ampere Rating	Catalog Number Eaton	General Electric	Siemens	Square D
Non-Fusible, Three-Pole, Three-Wire, 240 Volt/600 Vac, NEMA 1				
30	**DH361UGK**	THN3361	HNF361	HU361
60	**DH362UGK**	THN3362	HNF362	HU362
100	**DH363UGK**	THN3363	HNF363	HU363
200	**DH364UGK**	THN3364	HNF364	HU364
400	**DH365UGK**	THN3365	HNF365	HU365
600	**DH366UGK**	THN3366	HNF366	HU366
800	**DH367UGK**	TC36367	HNF367	HU367
1200	**DH368UGK**	TC36368	HNF368	HU368
Fusible, Two-Pole, Three-Wire, 240 Vac, NEMA 3R				
30	**DH221NRK**	TH3221R	N/A	H221NRB
60	**DH222NRK**	TH3222R	N/A	H222NRB
100	**DH223NRK**	TH3223R	N/A	H223NRB
200	**DH224NRK**	TH3224R	N/A	H224NRB
400	**DH225FRK**	TH3225R	N/A	H225R
600	**DH226FRK**	TH3226R	N/A	H226R
800	**DH227NRK**	TC72267R	N/A	H227R
1200	**DH328FRK**	TC72268R	N/A	H228R
Fusible, Two-Pole, Three-Wire, 240 Vac, NEMA 3R				
30	**DH221NRK**	TH3221R	HF221NR	H221NRB
60	**DH222NRK**	TH3222R	HF222NR	H222NRB
100	**DH223NRK**	TH3223R	HF223NR	H223NRB
200	**DH224NRK**	TH3224R	HF224NR	H224NRB
400	**DH225NRK**	TH3225R	HF225NR	H225NR
600	**DH226NRK**	TH3226R	HF226NR	H226NR
800	**DH227NRK**	TC72267R ①	HF227NR	H227NR
1200	**DH328NRK**	TC72268R ①	HF228NR	H228NR
Fusible, Three-Pole, Three-Wire, 240 Vac, NEMA 3R				
30	**DH321FRK**	TH4321R	N/A	H321NRB
60	**DH322FRK**	TH4322R	N/A	H322NRB
100	**DH323FRK**	TH4323R	N/A	H323NRB
200	**DH324FRK**	TH4324R	N/A	H324NRB
400	**DH325FRK**	TH3325R	N/A	H325NR
600	**DH326FRK**	TH3326R	N/A	H326NR
800	**DH327FRK**	TC72367R	N/A	H327NR
1200	**DH328FRK**	TC72368R	N/A	H328NR

Notes

① Separate neutral kit required.

② 600 V switch.

Always verify the number of poles and wires required since catalog numbers may appear in multiple tables.

Supplied by Digital Stout Innovation & Trading FZE

Heavy-Duty, continued

Ampere Rating	Catalog Number Eaton	General Electric	Siemens	Square D
Fusible, Three-Pole, Four-Wire, 240 Vac, NEMA 3R				
30	**DH321NRK**	TH4321R	HF321NR	H321NRB
60	**DH322NRK**	TH4322R	HF322NR	H322NRB
100	**DH323NRK**	TH4323R	HF323NR	H323NRB
200	**DH324NRK**	TH4324R	HF324NR	H324NRB
400	**DH325NRK**	TH3325R ①	HF325NR	H325R
600	**DH326NRK**	TH3326R ①	HF326NR	H326R
800	**DH327NRK**	TC72367R ①	HF327NR	H327R
1200	**DH328NRK**	TC72368R ①	HF328NR	H328R
Non-Fusible, Three-Pole, Three-Wire, 240 Volt/600 Vac, NEMA 3R				
30	**DH361URK**	THN3361R	HNF361R	HU361RB
60	**DH362URK**	THN3362R	HNF362R	HU362RB
100	**DH363URK**	THN3363R	HNF363R	HU363RB
200	**DH364URK**	THN3364R	HNF364R	HU364RB
400	**DH365URK**	THN3365R	HNF365R	HU365R
600	**DH366URK**	THN3366R	HNF366R	HU366R
800	**DH367URK**	N/A	HNF367R	HU367R
1200	**DH368URK**	N/A	HNF368R	HU368R
Fusible, Two-Pole, Two-Wire, 240 Vac, NEMA 4/4X				
30	**DH221FWK**	TH2221SS	HF221S	H221DS
60	**DH222FWK**	TH2222SS	HF222S	H222DS
100	**DH223FWK**	TH3223SS	HF223S	H223DS
200	**DH224FWK**	TH3224SS	HF224S	H224DS
400	**DH225FWK**	TH3225SS	HF325S	H225DS
600	**DH226FWK**	TH3226SS	HF326S	H226DS
Fusible, Two-Pole, Three-Wire, 240 Vac, NEMA 4/4X				
30	**DH221NWK**	TH3221SS	HF321S ①	H221DS ①
60	**DH222NWK**	TH3222SS	HF322S ①	H222DS ①
100	**DH223NWK**	TH3223SS	HF323S ①	H223DS ①
200	**DH224NWK**	TH3224SS	HF324S ①	H224DS ①
400	**DH225NWK**	TH3225SS	HF325S ①	H225NDS
600	**DH226NWK**	TH3226SS	HF326S ①	H226NDS
800	**DH227NWK**	N/A	HF327S ①	N/A
Fusible, Three-Pole, Three-Wire, 240 Vac, NEMA 4/4X				
30	**DH321FWK**	TH3321SS	HF321S	H321DS
60	**DH322FWK**	TH3322SS	HF322S	H322DS
100	**DH323FWK**	TH4323SS	HF323S	H323DS
200	**DH324FWK**	TH4324SS	HF324S	H324DS
400	**DH325FWK**	TH4325SS	HF325S	H325DS
600	**DH326FWK**	TH4326SS	HF326S	H326DS
800	**DH327FWK**	N/A	HF327S	N/A
Fusible, Three-Pole, Four-Wire, 240 Vac, NEMA 4/4X				
30	**DH321NWK**	TH4321SS	HF321S ①	H321DS ①
60	**DH322NWK**	TH4322SS	HF322S ①	H322DS ①
100	**DH323NWK**	TH4323SS	HF323S ①	H323DS ①
200	**DH324NWK**	TH4324SS	HF324S ①	H324DS ①
400	**DH325NWK**	TH4325SS	HF325S ①	H325NDS
600	**DH326NWK**	TH4326SS	HF326S ①	H326NDS

Heavy-Duty, continued

Ampere Rating	Catalog Number Eaton	General Electric	Siemens	Square D
Fusible, Two-Pole, Two-Wire, 240 Vac, NEMA 12				
30	**DH221FDK**	TH2221J	HF221J	H221AWK
60	**DH222FDK**	TH2222J	HF222J	H222AWK
100	**DH223FDK**	TH3223J	HF223J	H223AWK
200	**DH224FDK**	TH3224J	HF224J	H224AWK
400	**DH225FDK**	TH3225J	HF325J	H225AWK
600	**DH226FDK**	TH3226J	HF326J	H226AWK
800	**DH227FDK**	N/A	HF327J	H227AWK
1200	**N/A**	N/A	N/A	H228AWK
Fusible, Two-Pole, Three-Wire, 240 Vac, NEMA 12				
30	**DH221NDK**	TH3221J	HF221J ①	H221AWK
60	**DH222NDK**	TH3222J	HF222J ①	H222AWK
100	**DH223NDK**	TH3223J	HF223J ①	H223AWK
200	**DH224NDK**	TH3224J	HF224J ①	H224AWK
400	**DH225NDK**	TH3225J	HF325J ①	H225NAWK
600	**DH226NDK**	TH3226J	HF326J ①	H226NAWK
800	**DH227NDK**	N/A	HF327J ①	H227NAWK
1200	**N/A**	N/A	N/A	H228NAWK
Fusible, Three-Pole, Three-Wire, 240 Vac, NEMA 12				
30	**DH321FDK**	TH3321J	HF321J	H321AWK
60	**DH322FDK**	TH3322J	HF322J	H322AWK
100	**DH323FDK**	TH4323J	HF323J	H323AWK
200	**DH324FDK**	TH4324J	HF324J	H324AWK
400	**DH325FDK**	TH4325J	HF325J	H325AWK
600	**DH326FDK**	TH4326J	HF326J	H326AWK
800	**DH327FDK**	N/A	HF327J	H327AWK
1200	**N/A**	N/A	N/A	H328AWK
Fusible, Three-Pole, Four-Wire, 240 Vac, NEMA 12				
30	**DH321NDK**	TH4321J	HF321J ①	H321AWK ①
60	**DH322NDK**	TH4322J	HF322J ①	H322AWK ①
100	**DH323NDK**	TH4323J	HF323J ①	H323AWK ①
200	**DH324NDK**	TH4324J	HF324J ①	H324AWK ①
400	**DH325NDK**	TH4325J	HF325J ①	H325NAWK
600	**DH326NDK**	TH4326J	HF326J ①	H326NAWK
800	**N/A**	N/A	HF327J ①	H327NAWK
1200	**N/A**	N/A	N/A	H328NAWK
Fusible, Four-Pole, Four-Wire, 240 Vac, NEMA 12				
30	**DH421FDK**	N/A	N/A	N/A
60	**DH422FDK**	N/A	N/A	N/A
100	**DH423FDK**	N/A	N/A	N/A
200	**DH424FDK**	N/A	N/A	N/A

Notes

① Separate neutral kit required.

Always verify the number of poles and wires required since catalog numbers may appear in multiple tables.

Supplied by Digital Stout Innovation & Trading FZE

Heavy-Duty, continued

Ampere Rating	Catalog Number Eaton	General Electric	Siemens	Square D
Fusible, Two-Pole, Two-Wire, 600 Vac, NEMA 1				
30	**DH261FGK**	TH2261DC	HF261	H361
60	**DH262FGK**	TH2262DC	HF262	H362
100	**DH263FGK**	TH2263DC	HF263	H363
200	**DH264FGK**	N/A	N/A	H364
400	**DH265FGK**	N/A	HF265	H265
600	**DH266FGK**	N/A	HF266	H266
800	**DH267FGK**	N/A	N/A	H267
1200	**N/A**	N/A	N/A	H268
Fusible, Three-Pole, Three-Wire, 600 Vac, NEMA 1				
30	**DH361FGK**	TH3361	HF361	H361
60	**DH362FGK**	TH3362	HF362	H362
100	**DH363FGK**	TH3363	HF363	H363
200	**DH364FGK**	TH3364	HF364	H364
400	**DH365FGK**	TH3365	HF365	H365
600	**DH366FGK**	TH3366	HF366	H366
800	**DH367FGK**	TC72367	HF367	H367
1200	**DH368FGK**	TC72368	HF368	H368
Fusible, Three-Pole, Four-Wire, 600 Vac, NEMA 1				
30	**DH361NGK**	TH3361 ①	HF361N	H361N
60	**DH362NGK**	TH3362 ①	HF362N	H362N
100	**DH363NGK**	TH3363 ①	HF363N	H363N
200	**DH364NGK**	TH3364 ①	HF364N	H364N
400	**DH365NGK**	TH3365 ①	HF365N	H365N
600	**DH366NGK**	TH3366 ①	HF366N	H366N
800	**DH367NGK**	TC72367 ①	HF367N	H367N
1200	**DH368NGK**	TC72368 ①	HF368 ①	H368N
Fusible, Four-Pole, Four-Wire, 600 Vac, NEMA 1				
30	**DH461FGK**	TH6661	N/A	H461
60	**DH462FGK**	TH6662	N/A	H462
100	**DH463FGK**	TH6663	N/A	H463
200	**DH464FGK**	TH6664	N/A	H464
400	**DH465FGK**	N/A	N/A	H465
600	**DH466FGK**	N/A	N/A	H466
Non-Fusible, Two-Pole, Two-Wire, 600 Vac, NEMA 1				
30	**DH261UGK**	THN2261DC	HNF261	HU361
60	**DH262UGK**	THN2262DC	HNF262	HU362
100	**DH263UGK**	THN2263DC	HNF263	HU363
200	**DH264UGK**	N/A	N/A	HU364
400	**DH265UGK**	N/A	HNF265	HU265
600	**DH266UGK**	N/A	HNF266	HU266
800	**DH267UGK**	N/A	N/A	HU267
1200	**N/A**	N/A	N/A	HU268

Heavy-Duty, continued

Ampere Rating	Catalog Number Eaton	General Electric	Siemens	Square D
Non-Fusible, Four-Pole, Four-Wire, 600 Vac, NEMA 1				
30	**DH461UGK**	THN6661	N/A	HU461
60	**DH462UGK**	THN6662	N/A	HU462
100	**DH463UGK**	THN6663	N/A	HU463
200	**DH464UGK**	THN6664	N/A	HU464
400	**DH465UGK**	N/A	N/A	HU465
600	**DH466UGK**	N/A	N/A	HU466
Fusible, Two-Pole, Two-Wire, 600 Vac, NEMA 3R				
30	**DH261FRK**	TH2261RDC	HF261R	H361RB
60	**DH262FRK**	TH2262RDC	HF262R	H362RB
100	**DH263FRK**	TH2263RDC	HF263R	H363RB
200	**DH264FRK**	N/A	N/A	H364RB
400	**DH265FRK**	N/A	N/A	H265R
600	**DH266FRK**	N/A	HF265R	H266R
800	**DH267FRK**	N/A	HF266R	H267R
1200	**DH268FRK**	N/A	N/A	H268R
Fusible, Three-Pole, Three-Wire, 600 Vac, NEMA 3R				
30	**DH361FRK**	TH3361R	HF361R	H361RB
60	**DH362FRK**	TH3362R	HF362R	H362RB
100	**DH363FRK**	TH3363R	HF363R	H363RB
200	**DH364FRK**	TH3364R	HF364R	H364RB
400	**DH365FRK**	TH3365R	HF365R	H365R
600	**DH366FRK**	TH3366R	HF366R	H366R
800	**DH367FRK**	TC72367R	HF367R	H367R
1200	**DH368FRK**	TC72368R	HF368R	H368R
Fusible, Three-Pole, Four-Wire, 600 Vac, NEMA 3R				
30	**DH361NRK**	TH3361R ①	HF361NR	H361NRB
60	**DH362NRK**	TH3362R ①	HF362NR	H362NRB
100	**DH363NRK**	TH3363R ①	HF363NR	H363NRB
200	**DH364NRK**	TH3364R ①	HF364NR	H364NRB
400	**DH365NRK**	TH3365R ①	HF365NR	H365NR
600	**DH366NRK**	TH3366R ①	HF366NR	H366NR
800	**DH367NRK**	TC72367R ①	HF367NR	H367NR
1200	**DH368NRK**	TC72368R ①	HF368R	H368NR
Non-Fusible, Three-Pole, Three-Wire, 600 Vac, NEMA 3R				
30	**DH361URK**	THN2261RDC	HNF261R	HU361RB
60	**DH362URK**	THN2262RDC	HNF262R	HU362RB
100	**DH363URK**	THN2263RDC	HNF263R	HU363RB
200	**DH364URK**	N/A	N/A	HU364RB
400	**DH365URK**	N/A	HNF265R	HU265R
600	**DH366URK**	N/A	HNF266R	HU266R
800	**DH367URK**	N/A	N/A	HU267R
1200	**DH368URK**	N/A	N/A	HU268R

Notes

① Separate neutral kit required.

Always verify the number of poles and wires required since catalog numbers may appear in multiple tables.

Supplied by Digital Stout Innovation & Trading FZE

Heavy-Duty, continued

Ampere Rating	Catalog Number Eaton	General Electric	Siemens	Square D
Non-Fusible, Four-Pole, Four-Wire, 600 Vac, NEMA 3R				
30	**DH461UDK**	THN6661	N/A	N/A
60	**DH462UDK**	THN6662	N/A	N/A
100	**DH463UDK**	THN6663	N/A	N/A
200	**DH464UDK**	THN6664	N/A	N/A
Fusible, Two-Pole, Two-Wire, 600 Vac, NEMA 4/4X Stainless Steel				
30	**DH261FWK**	TH2261SSDC	HF261S	H361DS
60	**DH262FWK**	TH2262SSDC	HF262S	H362DS
100	**DH263FWK**	TH2263SSDC	HF263S	H363DS
200	**DH264FWK**	N/A	N/A	H364DS
400	**DH265FWK**	N/A	HF265S	H265DS
600	**DH366FWK**	N/A	HF266S	H266DS
800	**DH367FWK**	N/A	N/A	N/A
Fusible, Three-Pole, Three-Wire, 600 Vac, NEMA 4/4X Stainless Steel				
30	**DH361FWK**	TH3361SS	HF361S	H361DS
60	**DH362FWK**	TH3362SS	HF362S	H362DS
100	**DH363FWK**	TH3363SS	HF363S	H363DS
200	**DH364FWK**	TH3364SS	HF364S	H364DS
400	**DH365FWK**	TH3365SS	HF365S	H365DS
600	**DH366FWK**	TH3366SS	HF366S	H366DS
800	**DH367FWK**	N/A	HF367S	N/A
Fusible, Three-Pole, Four-Wire, 600 Vac, NEMA 4/4X Stainless Steel				
30	**DH361NWK**	TH3361SS ①	HF361S ①	H361DS ①
60	**DH362NWK**	TH3362SS ①	HF362S ①	H362DS ①
100	**DH363NWK**	TH3363SS ①	HF363S ①	H363DS ①
200	**DH364NWK**	TH3364SS ①	HF364S ①	H364NDS
400	**DH365NWK**	TH3365SS ①	HF365S ①	H365NDS
600	**DH366NWK**	TH3366SS ①	HF366S ①	H366NDS
Non-Fusible, Two-Pole, Two-Wire, 600 Vac, NEMA 4/4X Stainless Steel				
30	**DH261UWK**	THN2261SSDC	HNF261S	HU361DS
60	**DH262UWK**	THN2262SSDC	HNF262S	HU362DS
100	**DH263UWK**	THN2263SSDC	HNF263S	HU363DS
200	**DH264UWK**	N/A	N/A	HU364DS
400	**DH265UWK**	N/A	HNF265S	HU265DS
600	**DH266UWK**	N/A	HNF266S	HU266DS
800	**DH267UWK**	N/A	N/A	N/A
Non-Fusible, Three-Pole, Three-Wire, 600 Vac, NEMA 4/4X Stainless Steel				
30	**DH361UWK**	THN3361SS	HNF361S	HU361DS
60	**DH362UWK**	THN3362SS	HNF362S	HU362DS
100	**DH363UWK**	THN3363SS	HNF363S	HU363DS
200	**DH364UWK**	THN3364SS	HNF364S	HU364DS
400	**DH365UWK**	THN3365SS	HNF365S	HU365DS
600	**DH366UWK**	THN3366SS	HNF366S	HU366DS
800	**DH367UWK**	N/A	HNF367S	N/A

Heavy-Duty, continued

Ampere Rating	Catalog Number Eaton	General Electric	Siemens	Square D
Non-Fusible, Four-Pole, Four-Wire, 600 Vac, NEMA 4/4X Stainless Steel				
30	**DH461UWK**	N/A	N/A	HU461DS
60	**N/A**	N/A	N/A	HU462DS
100	**N/A**	N/A	N/A	HU464DS
200	**N/A**	N/A	N/A	HU464DS
Fusible, Two-Pole, Two-Wire, 600 Vac, NEMA 12				
30	**DH261FDK**	TH2261JDC	HF261J	H361AWK
60	**DH262FDK**	TH2262JDC	HF262J	H362AWK
100	**DH263FDK**	TH2263JDC	HF263J	H363AWK
200	**DH264FDK**	N/A	N/A	H364AWK
400	**DH265FDK**	N/A	HF265J	H265AWK
600	**DH266FDK**	N/A	HF266J	H266AWK
800	**DH267FDK**	N/A	N/A	H267AWK
1200	**N/A**	N/A	N/A	H268AWK
Fusible, Three-Pole, Three-Wire, 600 Vac, NEMA 12				
30	**DH361FDK**	TH3361J	HF361J	H361AWK
60	**DH362FDK**	TH3362J	HF362J	H362AWK
100	**DH363FDK**	TH3363J	HF363J	H363AWK
200	**DH364FDK**	TH3364J	HF364J	H364AWK
400	**DH365FDK**	TH3365J	HF365J	H365AWK
600	**DH366FDK**	TH3366J	HF366J	H366AWK
800	**DH367FDK**	N/A	HF367J	H367AWK
1200	**N/A**	N/A	N/A	H368AWK
Fusible, Three-Pole, Four-Wire, 600 Vac, NEMA 12				
30	**DH361NDK**	THN3361J ①	HF361J ①	H361AWK ①
60	**DH362NDK**	THN3362J ①	HF362J ①	H362AWK ①
100	**DH363NDK**	THN3363J ①	HF363J ①	H363AWK ①
200	**DH364NDK**	THN3364J ①	HF364J ①	H364NAWK
400	**DH365NDK**	THN3365J ①	HF365J ①	H365NAWK
600	**DH366NDK**	THN3366J ①	HF366J ①	H366NAWK
800	**DH367NDK**	N/A	HF367J ①	H367NAWK
1200	**N/A**	N/A	N/A	H368NAWK
Fusible, Four-Pole, Four-Wire, 600 Vac, NEMA 12				
30	**N/A**	TH6661	N/A	H461AWK
60	**N/A**	TH6662	N/A	H462AWK
100	**DH463FDK**	TH6663	N/A	H463AWK
200	**DH464FDK**	TH6664	N/A	H464AWK
400	**N/A**	N/A	N/A	H465AWK

Notes

① Separate neutral kit required.

Always verify the number of poles and wires required since catalog numbers may appear in multiple tables.

Supplied by Digital Stout Innovation & Trading FZE

Heavy-Duty, continued

Ampere Rating	Catalog Number Eaton	General Electric	Siemens	Square D
Non-Fusible, Two-Pole, Two-Wire, 600 Vac, NEMA 12				
30	**DH261UDK**	THN2261JDC	HNF261J	HU361AWK
60	**DH262UDK**	THN2262JDC	HNF262J	HU362AWK
100	**DH263UDK**	THN2263JDC	HNF263J	HU363AWK
200	**DH264UDK**	N/A	N/A	HU364AWK
400	**DH265UDK**	N/A	HNF265J	HU265AWK
600	**DH266UDK**	N/A	HNF266J	HU266AWK
800	**DH267UDK**	N/A	N/A	HU267AWK
1200	**N/A**	N/A	N/A	HU268AWK
Non-Fusible, Three-Pole, Three-Wire, 600 Vac, NEMA 12				
30	**DH361UDK**	THN3361J	HNF361J	HU361AWK
60	**DH362UDK**	THN3362J	HNF362J	HU362AWK
100	**DH363UDK**	THN3363J	HNF363J	HU363AWK
200	**DH364UDK**	THN3364J	HNF364J	HU364AWK
400	**DH365UDK**	THN3365J	HNF365J	HU365AWK
600	**DH366UDK**	THN3366J	HNF366J	HU366AWK
800	**DH367UDK**	N/A	HNF367J	HU367AWK
1200	**N/A**	N/A	N/A	HU368AWK
Non-Fusible, Four-Pole, Four-Wire, 600 Vac, NEMA 12				
30	**DH461UDK**	THN6661	N/A	HU461AWK
60	**DH462UDK**	THN6662	N/A	HU462AWK
100	**DH463UDK**	THN6663	N/A	HU463AWK
200	**DH464UDK**	THN6664	N/A	HU464AWK
400	**N/A**	N/A	N/A	HU465AWK

Heavy-Duty Six-Pole

Ampere Rating	Catalog Number Eaton	General Electric	Siemens	Square D
Fusible, Six-Pole, Six-Wire, 600 Vac, NEMA 3R				
30	**DH661FDK**	TH6661	F651H	N/A
60	**DH662FDK**	TH6662	F652H	N/A
100	**DH663FDK**	TH6663	F653H	N/A
200	**DH664FDK**	TH6664	N/A	N/A
Fusible, Six-Pole, Six-Wire, 600 Vac, NEMA 12				
30	**DH661FDK**	TH6661	F651H	N/A
60	**DH662FDK**	TH6662	F652H	N/A
100	**DH663FDK**	TH6663	F653H	H663AWK
200	**DH664FDK**	TH6664	N/A	H664RWK
Fusible, Six-Pole, Six-Wire, 600 Vac, NEMA 4X				
30	**N/A**	N/A	F651SS	N/A
60	**N/A**	N/A	F652SS	N/A
100	**N/A**	N/A	F653SS	H663DS
200	**N/A**	N/A	N/A	H664DS
Non-Fusible, Six-Pole, Six-Wire, 600 Vac, NEMA 3R				
30	**DH661UDK**	THN6661	NF651H	N/A
60	**DH662UDK**	THN6662	NF652H	N/A
100	**DH663UDK**	THN6663	NF653H	N/A
200	**DH664UDK**	THN6664	N/A	N/A
Non-Fusible, Six-Pole, Six-Wire, 600 Vac, NEMA 12				
30	**DH661UDK**	THN6661	NF651H	HU661AWK
60	**DH662UDK**	THN6662	NF652H	HU662AWK
100	**DH663UDK**	THN6663	NF653H	HU663AWK
200	**DH664UDK**	THN6664	N/A	HU664RWK
Non-Fusible, Six-Pole, Six-Wire, 600 Vac, NEMA 4X				
30	**DH661UWK**	N/A	NF651SS	HU661DS
60	**DH662UWK**	N/A	NF652SS	HU662DS
100	**DH663UWK**	N/A	NF653SS	HU663DS
200	**DH664UWK**	N/A	N/A	HU664DS

Note

Always verify the number of poles and wires required since catalog numbers may appear in multiple tables.

Supplied by Digital Stout Innovation & Trading FZE

Double-Throw

Ampere Rating	Catalog Number Eaton	General Electric	Siemens	Square D
Fusible, Two-Pole, Two-Wire, 240 Vac, NEMA 1				
30	**DT321FGK**	TDT3321	N/A	N/A
60	**DT322FGK**	TDT3322	N/A	N/A
100	**DT323FGK**	TDT3323	N/A	DT223
200	**DT224FGK**	TDT3324	DTF224	DT224
400	**DT325FGK**	TDT3325	N/A	N/A
600	**DT326FGK**	TDT3326	N/A	N/A
Fusible, Three-Pole, Three-Wire, 240 Vac, NEMA 1				
30	**DT321FGK**	TDT3321	DTF321	DT321
60	**DT322FGK**	TDT3322	DTF322	DT322
100	**DT323FGK**	TDT3323	DTF323	DT323
200	**DT324FGK**	TDT3324	DTF324	DT324
400	**DT325FGK**	TDT3325	DTF325	N/A
600	**DT326FGK**	TDT3326	DTF326	N/A
Non-Fusible, Two-Pole, Two-Wire, 240 Vac, NEMA 1				
30	**DT221UGK**	N/A	DTNF221	92251
60	**DT222UGK**	N/A	DTNF222	DTU222
100	**DT223UGK**	N/A	DTNF223	DTU223
200	**DT224UGK**	N/A	DTNF224	DTU224
400	**DT225UGK**	N/A	DTNF225	92255
600	**DT226UGK**	N/A	DTNF226	N/A
800	**DT227UGK**	N/A	N/A	N/A
Non-Fusible, Three-Pole, Three-Wire, 240 Vac, NEMA 1				
30	**DT321UGK**	TC35321	DTNF321	DTU321
60	**DT322UGK**	TC35322	DTNF322	DTU322
100	**DT323UGK**	TC35323	DTNF323	DTU323
200	**DT324UGK**	TC35324	DTNF324	DTU324
400	**DT325UGK**	TC35325	DTNF325	92355
600	**DT326UGK**	TC35326	DTNF326	92356
800	**DT327UGK**	N/A	DTNF327	N/A
Fusible, Three-Pole, Three-Wire, 600 Vac, NEMA 1				
30	**DT361FGK**	TDT3361	DTF361	DT361
60	**DT362FGK**	TDT3362	DTF362	DT362
100	**DT363FGK**	TDT3363	DTF363	DT363
200	**DT364FGK**	TDT3364	DTF364	DT364
400	**DT365FGK**	TDT3365	DTF365	N/A
600	**N/A**	N/A	N/A	N/A
Non-Fusible, Two-Pole, Two-Wire, 600 Vac, NEMA 1				
30	**DT261UGK**	N/A	DTNF261	N/A
60	**DT262UGK**	N/A	DTNF262	82342
100	**DT263UGK**	N/A	DTNF263	82343
200	**DT264UGK**	N/A	DTNF264	82344
400	**DT265UGK**	N/A	DTNF265	92345
600	**DT266UGK**	N/A	DTNF266	92346

Double-Throw, continued

Ampere Rating	Catalog Number Eaton	General Electric	Siemens	Square D
Non-Fusible, Three-Pole, Three-Wire, 600 Vac, NEMA 1				
30	**DT361UGK**	TC35361	DTNF361	DTU361
60	**DT362UGK**	TC35362	DTNF362	DTU362
100	**DT363UGK**	TC35363	DTNF363	DTU363
200	**DT364UGK**	TC35364	DTNF364	DTU364
400	**DT365UGK**	TC35365	DTNF365	92345
600	**DT366UGK**	TC35366	DTNF366	92346
800	**DT367UGK**	N/A	DTNF367	N/A
1200	**N/A**	N/A	N/A	N/A
Non-Fusible, Four-Pole, Four-Wire, 600 Vac, NEMA 1				
30	**N/A**	N/A	N/A	N/A
60	**N/A**	N/A	N/A	DTU462
100	**N/A**	N/A	N/A	DTU463
200	**DT464UGK**	N/A	NF454DTK	DTU464
400	**DT465UGK**	N/A	NF455DTK	92445
600	**DT466UGK**	N/A	NF456DTK	92446
800	**DT467UGK**	N/A	NF457DTK	N/A
Fusible, Two-Pole, Two-Wire, 240 Vac, NEMA 3R				
30	**DT321FRK**	TDT3321R	N/A	N/A
60	**DT322FRK**	TDT3322R	N/A	N/A
100	**DT323FRK**	TDT3323R	N/A	DT223RB
200	**DT224FRK**	TDT3324R	DTF224R	DT224RB
Fusible, Three-Pole, Three-Wire, 240 Vac, NEMA 3R				
30	**DT321FRK**	TDT3321R	DTF321R	DT321RB
60	**DT322FRK**	TDT3322R	DTF322R	DT322RB
100	**DT323FRK**	TDT3323R	DTF323R	DT323RB
200	**DT324FRK**	TDT3324R	DTF324R	DT324RB
400	**DT325FRK**	N/A	FR325DTK	N/A
600	**DT326FRK**	N/A	FR326DTK	N/A
Non-Fusible, Two-Pole, Two-Wire, 240 Vac, NEMA 3R				
30	**N/A**	N/A	N/A	N/A
60	**N/A**	N/A	N/A	N/A
100	**DT223URK**	N/A	N/A	DTU223RB
200	**DT224URK**	N/A	DTNF224R	DTU224RB
400	**DT225URK**	N/A	DTNF225R	92255R
Non-Fusible, Three-Pole, Three-Wire, 240 Vac, NEMA 3R				
30	**N/A**	N/A	N/A	N/A
60	**N/A**	N/A	N/A	N/A
100	**DT323URK**	N/A	DTNF323R	DTU323RB
200	**DT324URK**	N/A	DTNF324R	DTU324RB
400	**DT325URK**	N/A	N/A	92355R
600	**N/A**	N/A	N/A	92356R

Note

Always verify the number of poles and wires required since catalog numbers may appear in multiple tables.

Supplied by Digital Stout Innovation & Trading FZE

Double-Throw, continued

Ampere Rating	Catalog Number Eaton	General Electric	Siemens	Square D
Fusible, Three-Pole, Three-Wire, 600 Vac, NEMA 3R				
30	**N/A**	N/A	N/A	DT361RB
60	**N/A**	N/A	N/A	DT362RB
100	**DT363FRK**	N/A	DTF363R	DT363RB
200	**DT364FRK**	N/A	DTF364R	DT364RB
400	**DT365FRK**	N/A	FR355DTK	N/A
Non-Fusible, Two-Pole, Two-Wire, 600 Vac, NEMA 3R				
30	**N/A**	N/A	N/A	N/A
60	**N/A**	N/A	N/A	82342RB
100	**N/A**	N/A	N/A	82343RB
200	**DT264URK**	N/A	DTNF264R	82344RB
400	**DT265URK**	N/A	DTNF265R	92345RB
600	**DT266URK**	N/A	NFR256DTK	92346RB
Non-Fusible, Three-Pole, Three-Wire, 600 Vac, NEMA 3R				
30	**DT361URK**	N/A	DTNF361R	DTU361RB
60	**DT362URK**	N/A	DTNF362R	DTU362RB
100	**DT363URK**	N/A	DTNF363R	DTU363RB
200	**DT364URK**	N/A	DTNF364R	DTU364RB
400	**DT365URK**	N/A	DTNF365R	92345RB
600	**DT366URK**	N/A	DTNF366R	92346RB
800	**DT367URK**	N/A	DTNF367R	N/A
Non-Fusible, Four-Pole, Four-Wire, 600 Vac, NEMA 3R				
30	**DT461URK**	N/A	NFR451DTK	N/A
60	**DT462URK**	N/A	NFR452DTK	92442RB
100	**DT463URK**	N/A	NFR453DTK	92443RB
200	**DT464URK**	N/A	NFR454DTK	92444RB
400	**DT465URK**	N/A	NFR455DTK	92445R
600	**DT466URK**	N/A	NFR456DTK	92446R
800	**DT467URK**	N/A	NFR457DTK	N/A
Non-Fusible, Six-Pole, Six-Wire, 600 Vac, NEMA 3R				
30	**DT661URK**	N/A	NFR651DTK	N/A
60	**DT662URK**	N/A	NFR652DTK	N/A
100	**DT663URK**	N/A	NFR653DTK	N/A
Non-Fusible, Two-Pole, Two-Wire, 240 Vac, NEMA 12 ①				
30	**DT361UDK**	N/A	DTNF361J	H92251
60	**DT362UDK**	N/A	DTNF362J	H82252
100	**DT363UDK**	N/A	DTNF363J	H82253
200	**DT364UDK**	N/A	DTNF364J	H82254
400	**DT365UDK**	N/A	NF355HDTK	H92255
Non-Fusible, Three-Pole, Three-Wire, 240 Vac, NEMA 12 ①				
30	**DT361UDK**	N/A	DTNF361J	H92351
60	**DT362UDK**	N/A	DTNF362J	DTU362AWK
100	**DT363UDK**	N/A	DTNF363J	DTU363AWK
200	**DT364UDK**	N/A	DTNF364J	DTU364AWK
400	**DT365UDK**	N/A	NF355HDTK	H92355
600	**N/A**	N/A	N/A	H92356
Non-Fusible, Four-Pole, Four-Wire, 240 Vac, NEMA 12				
30	**N/A**	N/A	N/A	H92451
60	**N/A**	N/A	N/A	DTU462AWK
100	**N/A**	N/A	N/A	DTU463AWK
200	**N/A**	N/A	N/A	DTU464AWK
400	**N/A**	N/A	N/A	H92455
600	**N/A**	N/A	N/A	H92456

Double-Throw, continued

Ampere Rating	Catalog Number Eaton	General Electric	Siemens	Square D
Non-Fusible, Two-Pole, Two-Wire, 600 Vac, NEMA 12				
30	**DT361UDK**	N/A	DTNF361J	N/A
60	**DT362UDK**	N/A	DTNF362J	H82342
100	**DT363UDK**	N/A	DTNF363J	H82343
200	**DT364UDK**	N/A	DTNF364J	H82344
400	**DT365UDK**	N/A	NF355HDTK	H92345
600	**N/A**	N/A	N/A	H92346
Non-Fusible, Three-Pole, Three-Wire, 600 Vac, NEMA 12				
30	**DT361UDK**	N/A	DTNF361J	N/A
60	**DT362UDK**	N/A	DTNF362J	DTU362AWK
100	**DT363UDK**	N/A	DTNF363J	DTU363AWK
200	**DT364UDK**	N/A	DTNF364J	DTU364AWK
400	**DT365UDK**	N/A	NF355HDTK	H92345
600	**N/A**	N/A	N/A	H92346
Non-Fusible, Four-Pole, Four-Wire, 600 Vac, NEMA 12				
30	**N/A**	N/A	N/A	N/A
60	**N/A**	N/A	N/A	DTU462AWK
100	**N/A**	N/A	N/A	DTU463AWK
200	**N/A**	N/A	N/A	DTU464AWK
400	**N/A**	N/A	N/A	H92445
600	**N/A**	N/A	N/A	H92446
Non-Fusible, Two-Pole, Two-Wire, 600 Vac, NEMA 4X				
30	**DT361UWK**	N/A	DTNF361S	N/A
60	**DT362UWK**	N/A	DTNF362S	82342DS
100	**DT363UWK**	N/A	DTNF363S	82343DS
200	**DT364UWK**	N/A	DTNF364S	82344DS
400	**DT365UWK**	N/A	NF355SSDTK	N/A
Non-Fusible, Three-Pole, Three-Wire, 600 Vac, NEMA 4X				
30	**DT361UWK**	N/A	DTNF361S	N/A
60	**DT362UWK**	N/A	DTNF362S	DTU362DS
100	**DT363UWK**	N/A	DTNF363S	DTU363DS
200	**DT364UWK**	N/A	DTNF364S	DTU364DS
400	**DT365UWK**	N/A	NF355SSDTK	N/A
Non-Fusible, Four-Pole, Four-Wire, 600 Vac, NEMA 4X				
30	**N/A**	N/A	N/A	N/A
60	**N/A**	N/A	N/A	DTU462DS
100	**N/A**	N/A	N/A	DTU463DS
200	**N/A**	N/A	N/A	DTU464DS
Fusible, Three-Pole, Three-Wire, 600 Vac, NEMA 4X				
30	**DT361FWK**	N/A	F351SSDTK	N/A
60	**DT362FWK**	N/A	F352SSDTK	N/A
100	**DT363FWK**	N/A	F353SSDTK	N/A
200	**DT364FWK**	N/A	F354SSDTK	N/A
400	**DT365FWK**	N/A	F355SSDTK	N/A

Notes

① Eaton and Siemens switches shown are 600V switches.

Always verify the number of poles and wires required since catalog numbers may appear in multiple tables.

Supplied by Digital Stout Innovation & Trading FZE

Catalog Number Selection

General-Duty

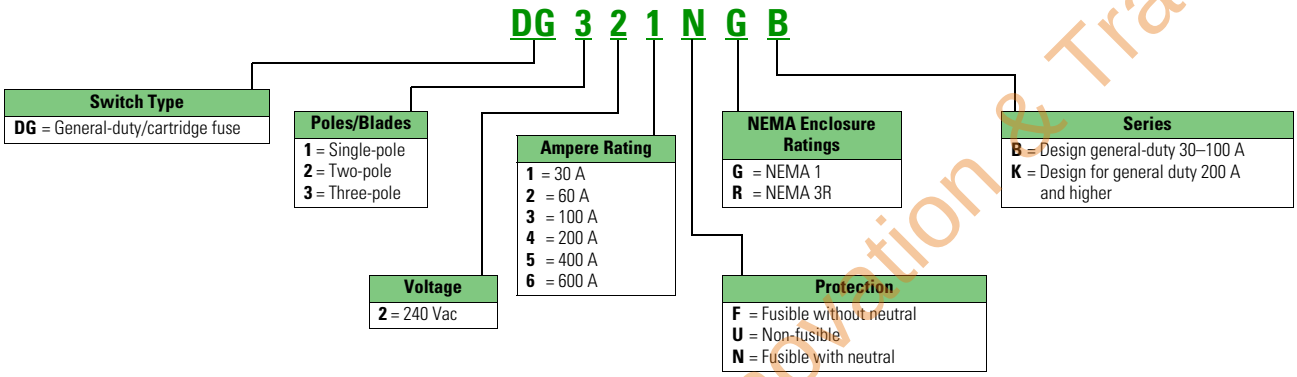

Heavy-Duty

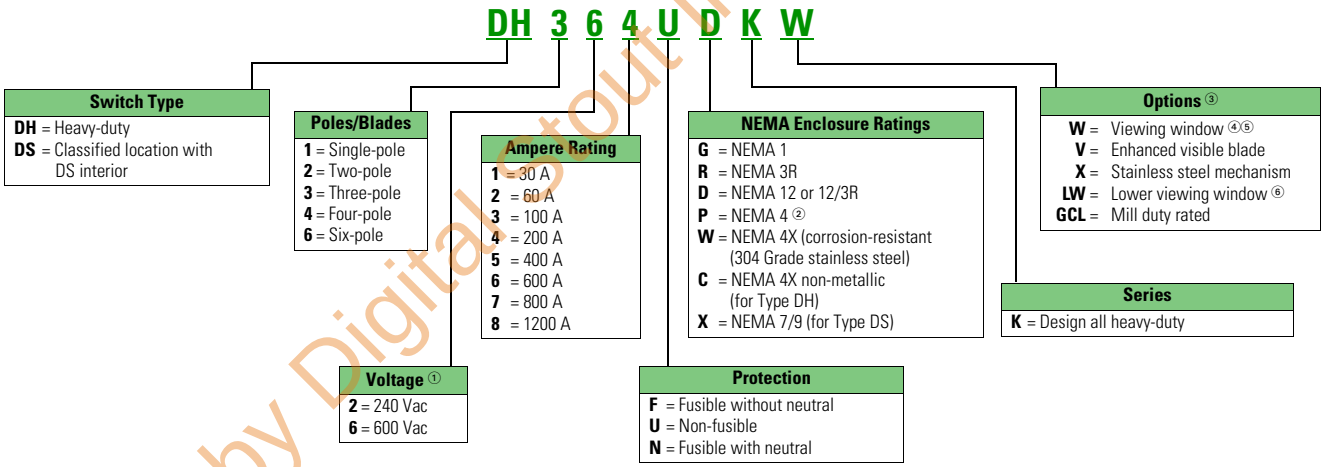

Notes

① For DC ratings, check individual switch ratings.
② Only available for 400 A and higher safety switches.
③ See Modifications-Flex Center for additional available options.
④ All window switches feature enhanced visible blade design as standard.
⑤ Only available in NEMA 12/3R and NEMA 4X enclosures.
⑥ Only available in 200 to 1200 A NEMA 12/3R and NEMA 4X enclosures.

These tables are intended for use in breaking down existing catalog numbers. They are not intended for building new catalog numbers.
A factory-installed ground lug is supplied on all safety switches.

Supplied by Digital Stout Innovation & Trading FZE

1

Double-Throw

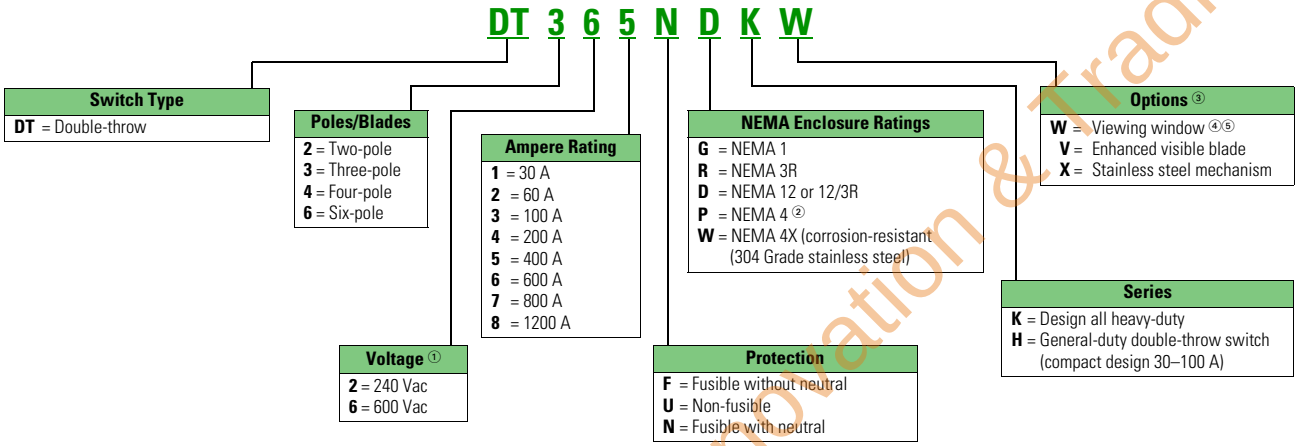

Notes

① For DC ratings, check individual switch ratings.
② Only available for 400 A and higher safety switches.
③ See Modifications-Flex Center for additional available options.
④ All window switches feature enhanced visible blade design as standard.
⑤ Only available in NEMA 12/3R and NEMA 4X enclosures.

These tables are intended for use in breaking down existing catalog numbers. They are not intended for building new catalog numbers.

A factory-installed ground lug is supplied on all safety switches.

Supplied by Digital Stout Innovation & Trading FZE

Options and Accessories

Safety Switches

DH030NK

DS200GK

DT100BK

DS16CP

DS200EK1

DS36CL

Description	Catalog Number
Neutral Kits ①	
30 A DG	**DG030NB**
60–100 A DG	**DG100NB**
200 A DG, DH (NEMA 1, 3R enclosures)	**DG200NK**
30–60 A DH	**DH030NK**
100 A DH	**DH100NK**
200 A DH (NEMA 4X, 12 enclosures)	**DH200NK**
400 A DG, DH	**DS400NK**
600 A DG, DH	**DS600NK**
400 A fusible DT, 800–1200A DH	**DS800NK**
30–100 A DT	**DT100NK**
200 A DT	**DT200NK**
400 A non-fusible DT	**DT400NK**
600 A non-fusible DT	**DT600NK**
600 A fusible DT, 800 A DT	**DT800NK**
1200 A DT	**DT1200NK**
Ground Lug Kits Factory-installed ground lug is supplied on all safety switches	
30–100 A DG	**DG030GB**
30–100 A DH, DT ②	**DS100GK**
200 A DG, DH, DT	**DS200GK**
400–600 A DG, 400–1200 A DH, 400–1200 A DT	**DS468GK**
Switching Neutral Bonding Kits ③	
30–100 A DT, 3P, 4P non-fusible	**DT100BK**
200 A DT, 3P, 4P non-fusible	**DT200BK**
400 A DT, 3P, 4P non-fusible	**DT400BK**
600 A DT, 3P, 4P non-fusible	**DT600BK**
800–1200 A DT, 3P, 4P non-fusible	**DT800BK**
Control Pole Kit (For 2P, 3P Switches)	
400–600 A DG, 30–1200 A DH, 30–1200 A DT Multiple key options are included with the control pole kit. Standard keys provide late-make, early-break functionality. Flanged key provides same make, same break functionality.	**DS16CP**
Auxiliary Contact Kits Auxiliary contact kits are not field installable on shunt trip safety switches	
All switches (except 30–100 A DG) 1NO/1NC	**DS200EK1** ④
All switches (except 30–100 A DG) 2NO/2NC	**DS200EK2** ④
NEMA 7/9 switches (30–100 A) 1NO/1NC	**178C265G05**
NEMA 7/9 switches (30–100 A) 2NO/2NC	**178C265G06**
Copper Lug Kits	
30 A DH, DT ⑤	**DS16CL**
60 A DH, DT ⑤	**DS26CL**
100 A DH, DT ⑤	**DS36CL**
200 A DH ⑤	**DS46CL**
400 A DH (NEMA 4, 4X, 12 enclosures) ⑥	**DS56CL**
600–800 A DH (NEMA 4, 4X, 12 enclosures) ⑥	**DS66CL**

Safety Switches, continued

DS56CK

DS60FP

DS22JK

DS12FK

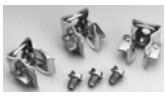

DS426TK

Description	Catalog Number
Crimp Lug Pad Kit (NEMA 4, 4X, 12 Enclosures Only)	
400–600 A DH ⑤	**DS56CK**
800 A DH ⑥	**DS76CK**
400–800 A neutral DH ③	**DS800CNK**
Fuse Puller Kits	
30 A DH ⑤	**DS30FP**
60 A DH ⑤	**DS60FP**
100 A DH ⑤	**DS100FP**
200 A DH ⑤	**DS200FP**
"J" Fuse Adapter Kits ⑦⑧	
60 A 240 V DH ⑤	**DS22JK**
60 A DH, DT and receptacle switches ⑤	**DS26JK**
400 A 600 V DT ⑨	**DT400JK**
600 A 240–600 V DH, 600 A DG ⑥	**DS600JK**
"R" Fuse Adapter Kits ⑤	
30 A DG	**DG030RB**
100 A DG	**DG100RB**
30 A 240 V DH, DT	**DS12FK**
30 A 600 V DH, DT, 60 A 240 V DH, DT, 60 A DG	**DS16FK**
60 A 600 V DH, DT	**DS26FK**
100 A 240–600 V DH, DT	**DS36FK**
200 A 240–600 V DH, DT, 200 A DG	**DS46FK**
400 A 240–600 V DH, 240 V DT, 400 A DG	**DS56FK**
600 A 240–600 V DH, DT, 600 A DG	**DS66FK**
"T" Fuse Adapter Kits	
200 A 240 V DH ⑤	**DS426TK**
200 A 600 V DH ⑤	**DS466TK**
400 A 240 V DG, DH, DT ⑥	**DS526TK**
400 A 600 V DH ⑥	**DS566TK**
600 A 240 V DG, DH ⑥	**DS626TK**
600 A 600 V DH ⑥	**DS666TK**
600 A 240 V DT ⑥	**DT626TK**
600 A 600 V DT ⑥	**DT666TK**
800 A 240 V DH ⑥	**DS726TK**
800 A 600 V DH, DT ⑥	**DS766TK**
Miscellaneous Kits	
Hookstick handle	**DH800HSH**
Lubricating grease for safety switch blades and contacts (each kit contains three 30 cc tubes of lubricating grease)	**DSLUBEKIT**

Notes

① Service entrance bonding kit and sticker are included with the neutral kit.
② Ground bar kit is not listed on device publications.
③ Order one kit per switch.
④ For duty ratings, see table on following page.
⑤ Order one kit for three poles.
⑥ Order one kit for each pole.
⑦ 30A Class J available as factory option only.
⑧ If Class J fuse kit is not listed, then switch will accept Class J fusing by repositioning either fuse base or fuse clips. No drilling required.
⑨ Order one kit for six poles.

Accessories are not applicable to NEMA 7/9 switches unless indicated otherwise.

Supplied by Digital Stout Innovation & Trading FZE

1

Auxiliary Contact Rating

AC Pilot Duty Ratings

Catalog Number	Description	Volts	Break (Amperes)	Make (Amperes)
DS200EK1	1NO/1NC	110	15.0	40.0
DS200EK1	1NO/1NC	220	10.0	20.0
DS200EK1	1NO/1NC	440	6.0	10.0
DS200EK1	1NO/1NC	600	5.0	8.0
DS200EK2	2NO/2NC	110	3.0	30.0
DS200EK2	2NO/2NC	220	1.5	15.0
DS200EK2	2NO/2NC	440	1.0	8.0
DS200EK2	2NO/2NC	600	0.8	6.0

DC Pilot Duty Ratings

Catalog Number	Description	Volts	Single Throw (Amperes)	Double Throw (Amperes)
DS200EK1	1NO/1NC	115	2.0	0.5
DS200EK1	1NO/1NC	230	0.5	0.2
DS200EK1	1NO/1NC	600	0.1	0.02
DS200EK2	2NO/2NC	115	1.0	0.2
DS200EK2	2NO/2NC	230	0.3	0.1
DS200EK2	2NO/2NC	600	0.1	—

Approximate Dimensions in Inches (mm)

DS050MH

Myers Type Hubs

NEMA 3R (400 A and above)
NEMA 4, 4X (stainless steel), 12

Catalog Number	Conduit Size
DS050MH	0.50 (12.7)
DS075MH	0.75 (19.1)
DS100MH	1.00 (25.4)
DS125MH	1.25 (31.8)
DS150MH	1.50 (38.1)
DS200MH	2.00 (50.8)
DS250MH	2.50 (63.5)
DS300MH	3.00 (76.2)
DS350MH	3.50 (88.9)
DS400MH	4.00 (101.6)
DS500MH	5.00 (127.0)

DS075H1

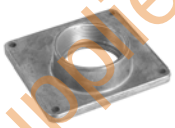

Plate Type Hubs

For NEMA 3R enclosures (up to 200 A)

Group 1 General-Duty, Heavy-Duty, Double-Throw Through 100 A		Group 2 General-Duty, Heavy-Duty, Double-Throw—200 A	
Catalog Number	**Conduit Size**	**Catalog Number**	**Conduit Size**
DS075H1	0.75 (19.1)	**DS200H2**	2.00 (50.8)
DS100H1	1.00 (25.4)	**DS250H2**	2.50 (63.5)
DS125H1	1.25 (31.8)	**DS300H2**	3.00 (76.2)
DS150H1	1.50 (38.1)	—	—
DS200H1	2.00 (50.8)	—	—

Catalog number **DS900AP** adapter kit permits Installation of Group 1 hubs on 200 A type general-duty, heavy-duty and double-throw switches.

Supplied by Digital Stout Innovation & Trading FZE

Modifications—Flex Center

Introduction

The Switching Device Flex Center is a special facility at the site of Eaton's Cleveland, Tennessee plant that is dedicated to providing customized safety switches and enclosed breakers that meet customer's challenging applications.

Common Flex Center Design Offerings

Modification	Catalog Suffix	Description
Custom paint	(varies)	Special paint colors are available such as red, orange, yellow, green, black, white. Other colors may be available upon request. Custom color is applied over the standard ANSI-61 gray finish.
Nameplates	-00NP	Plastic or phenolic nameplates are available. Up to three lines of text, 25 characters per line. Standard offering is white with black letters. Custom colors and sizes available upon request. Specify text at order entry.
Lock on provisions	-00LO	Available on heavy-duty and double-throw safety switches. Provision will accept a single lock.
Trapped key interlock	-00TK	Available on heavy-duty and double-throw safety switches. Trapped key systems are used on safety switches to prevent unauthorized operations or to predetermine a series of power transfers by an authorized operator.
Upper viewing window	W	An upper viewing window is centered over the switching contacts to provide visual verification of ON/OFF status. Available on NEMA 12/3R and NEMA 4X stainless steel heavy-duty and double-throw safety switches. **Note:** 30–100 A switches are now provided with a full view cover window for both blade and blown fuse viewing.
Lower viewing window	LW	A lower viewing window is centered over the fuses and provides visual verification of blown fuse indicators. Available on 200–1200 A NEMA 12/3R and NEMA 4X stainless steel heavy-duty and double-throw safety switches. Available for fusible switches only. **Note:** 30–100 A switches are now provided with a full view cover window for both blade and blown fuse viewing.
Neutral assemblies	N	Factory install of field neutral accessory kits. Add Suffix N on non-fusible switches, or replace the 6th character "F" with "N" on fusible switches.
Class "R" fuse clips	5 or 6	Factory installed Class R fuse clips/provisions. Add Suffix 5 for 240 V switches, and Suffix 6 for 600 V switches. Available on 30–600 A safety switches.
Class "T" fuse clips	T	Factory installed Class T fuse clips/provisions. Available on 200–1200 A safety switches.
Class "J" fuse clips	J	Factory installed Class J fuse clips/provisions. Available on 30–600 A safety switches. **Note:** Field modification kits are not available for 30 A heavy-duty safety switches. 30 A switches requiring Class J fusing must be ordered factory installed with J suffix.
Fungus proofing	-00FP	All non-metallic components of the switch are coated with a moisture and fungus-resistant varnish. The inhibitor used meets military specification: MIL-V-173C for MOISTURE AND FUNGUS-RESISTANT TREATMENT. The treated switch meets military specification MIL-T-152E for MOISTURE AND FUNGUS-RESISTANT TREATMENT OF COMMUNICATIONS, ELECTRONICS, AND ASSOCIATED EQUIPMENT. Not UL Listed.
Fuse pullers	FE	Factory installed fuse pullers. **Note:** Standard NEMA 12/3R and 4X switches 30–200 A are supplied with fuse pullers from the factory.
Crimp lug pads	-00CK	Factory installed crimp lug pad kits. Available on 400–800 A safety switches. Crimp lugs are not included. **Note:** Standard heavy-duty Type DH switches 30–200 A are adaptable to crimp lugs; simply remove the box lugs.
Copper lugs	-00CL	Factory installed copper lug kits. Available on 30–800 A safety switches.
Ground lug kits factory installed	G	Factory installed ground lug kits. Provides additional ground lug capacity when compared to ground lugs that come with standard safety switches. Available on 30–1200 A safety switches.
Custom lugs	-000L	Customer-specified lug arrangements are available on heavy-duty and double-throw safety switches.
Auxiliary contacts	2 or 3	Factory installed auxiliary contact kits (DS200EK1 or DS200EK2). Auxiliary contacts are Early-Make/Early-Break operation. To specify 1NO/1NC contact, add Suffix 2. To specify 2NO/2NC contacts, add Suffix 3.
Control pole	-00CP	The K-Series control pole provides one NO contact. It mounts in the exact location as the neutral block using the same pre-drilled holes. This is directly connected to the power pole operating shaft. Direct connection and visible blades provide more secure electrical interlocking than handle linkage operation of a snap/switch type interlock. This reliability meets the requirements of many specifications for four-pole switches when the fourth pole is required for secure electrical interlocking. This control pole provides Same-Make/Same-Break operation.
Control pole with offset	-0CP2	Same as above except this control pole provides Late-Make/Early-Break operation. Both Control Pole options are provided when you purchase the DS16CP field kit.
Switching neutral double throws	SN	UL Listed for three-pole and four-pole non-fusible double-throw safety switches. Switching neutrals are required for separately derived systems when bonding the neutral of the generator to a grounding system at the generator.
Surge protection	(varies)	Factory installed Eaton Type 1 (SP1 series) or Type 2 (CVX series) surge protective device products. SPD installed and wired to load side of disconnect.

Additional Flex Center Design Offerings

- Left-hand design (30–200 A)
- Cover controls
- 200% neutrals
- Seam-welded stainless steel
- Quick Connect products with Cam-Lok™ and Posi-Lok™ receptacles
- Custom enclosures
- 316-Grade stainless steel
- Mill duty switches
- Irrigation switches
- Fuses installed
- Hook stick handles (heavy-duty switches only)
- Custom labels
- Custom mounting
- Pad-mount designs
- Non-standard receptacles
- Enhanced visible blade
- Voltage indicators

Contact

For more information on these or any other modifications, please contact the Switching Device Flex Center at 1-888-329-9272, email FlexSwitches@eaton.com or visit Eaton.com/FlexCenter.

Supplied by Digital Stout Innovation & Trading FZE

1

Technical Data and Specifications

Standard Lug Capacities

Description	Minimum Wire Size	Maximum Wire Size	Wire Type
30 A DG	#14	#6	CU/AL
30 A DH, DT	#14	#2	CU/AL
60 A DG	#14	#1/0	CU/AL
60 A DH, DT	#14	#2	CU/AL
100 A DG ①	#14	#1/0	CU/AL
100 A DH, DT	#14	#1/0	CU/AL
200 A DG, DT	#6	250 kcmil	CU/AL
200 A DH Type 1 and 3R	#6	250 kcmil	CU/AL
200 A DH Type 4X and 12	#6	300 kcmil	CU/AL
400 A DG, DH, DT ②	(2) #1/0	(2) 300 kcmil	CU/AL **or** ③
	(1) #1/0	(1) 750 kcmil	CU/AL
600 A DG, DH	(1) #2	(1) 600 kcmil	CU/AL **and** ④
	(1) #1/0	(1) 750 kcmil	CU/AL
600 A non-fusible DT	(2) 250	(2) 500 kcmil	CU/AL
800 A DH	(4) #1/0	(4) 750 kcmil	CU/AL
600 A fusible DT, 800A DT	(3) #250	(3) 500 kcmil	CU/AL
1200 A DH, DT	(4) #1/0	(4) 750 kcmil	CU/AL
Copper-Bodied Lugs ⑤			
30 A CU	#14	#6	CU
60 A CU	#14	#4	CU
100 A CU	#6	#1/0	CU
200 A CU	#6	250 kcmil	CU
400 A CU Type 4, 4X, and 12	#1/0	500 kcmil	CU
600–800 A CU Type 4, 4X and 12	(2) #1/0	(2) 500 kcmil	CU

Notes

① The maximum size aluminum or copper-clad wire allowable for applications where the conductor enters or leaves the enclosure through the wall opposite its terminal is #1 gauge.

② Applicable to DG/DH non-fused NEMA 1 and 3R only. The maximum size wire allowable for applications where the conductor enters or leaves the enclosure through the wall opposite its terminal is 250 kcmil.

③ Single barrel lug that accepts one or two cables per phase as detailed above.

④ Double barrel lug that accepts 2 cables per phase as detailed above.

⑤ No Copper-Bodied Lugs are available for 1200 A switches. No Copper-Bodied Lugs are available for larger than 500 kcmil cables. No Copper-Bodied Lugs are available for 400–800 A NEMA 1 or NEMA 3R switches.

Although certain lug capacities are larger than required, only minimum wire bending space is provided per the requirements noted in NEC®.

A factory-installed ground lug is supplied on all safety switches.

Supplied by Digital Stout Innovation & Trading FZE

Alternate Lug Capacities ①

Description	Minimum Wire Size	Maximum Wire Size	Wire Type	Catalog Number Suffix	Line/Load ②
30 A, 60 A, 100 A DH fusible	(3) #14	(3) #2	CU/AL	-00LA ③	
30 A, 60 A, 100 A DH	(3) #14	(3) #2	CU/AL	-LALN ③	Line lugs only
30 A, 60 A, 100 A DH fusible	(3) #14	(3) #2	CU/AL	-LALD ③	Load lugs only
30 A, 60 A, 100 A DH fusible	(2) #14	(2) #2/0	CU/AL	-00LB ③	
30 A, 60 A, 100 A DH	(2) #14	(2) #2/0	CU/AL	-LBLN ③	Line lugs only
30 A, 60 A, 100 A DH fusible	(2) #14	(2) #2/0	CU/AL	-LBLD ③	Load lugs only
30 A, 60 A DH	#14	#1/0	CU/AL	-LSE3 ③	
100 A DH Type 1 and 3R	#6	250 kcmil	CU/AL	-LSE4 ④	
100 A DH Type 4X and 12	#6	300 kcmil	CU/AL	-LSE4 ④	
200 A DH	(2) #1/0	(2) 300 kcmil	CU/AL **or** ⑤	-LSE5 ⑥	
	(1) #1/0	(1) 750 kcmil	CU/AL		
400 A DH	(1) #2	(1) 600 kcmil	CU/AL **and** ⑦	-LSE6 ⑧	
	(1) #1/0	(1) 750 kcmil	CU/AL		
600 A DH	(4) #1/0	(4) 750 kcmil	CU/AL	-LSE7 ⑨	

Notes

① Alternate Lugs are available as Factory Installed options only, through the Switching Device Flex Center. Field Kits are not available.
② The Alternate Lugs will be provided on both Line and Load side, unless otherwise noted.
③ Uses the 100 A switch enclosure and dimensions.
④ Uses the 200 A switch enclosure and dimensions.
⑤ Single barrel lug that accepts one or two cables per phase as specified in table.
⑥ Uses the 400 A switch enclosure and dimensions.
⑦ Double barrel lug that accepts two cables per phase as specified in table.
⑧ Uses the 600 A switch enclosure and dimensions.
⑨ Uses the 800 A switch enclosure and dimensions.

Although certain lug capacities are larger than required, only minimum wire bending space is provided per the requirements noted in NEC®.

A factory-installed ground lug is supplied in all heavy-duty safety switches.

Supplied by Digital Stout Innovation & Trading FZE

Standard Ground Lug Capacities

Description	Minimum Wire Size	Maximum Wire Size	Wire Type
30 A, 60 A, 100 A DG	#14	#4	CU/AL
200 A DG	(2) #14	(2) #2	CU/AL
400 A, 600 A DG	(2) #6	(2) 250 kcmil	CU/AL
30 A, 60 A, 100 A DH	#14	#4	CU/AL
200 A DH Type 1 and 3R	(2) #14	(2) #2	CU/AL
200 A DH Type 4X and 12	#14	#4	CU/AL
400 A, 600 A, 800 A, 1200 A DH	(2) #6	(2) 250 kcmil	CU/AL
30 A, 60 A, 100 A DT	(3) #14	(3) #2	CU/AL
200 A DT	(3) #14	(3) #2	CU/AL
400 A DT	(3) #6	(3) 250 kcmil	CU/AL
600 A, 800 A, 1200 A DT	(4) #6	(4) 250 kcmil	CU/AL

Additional Grounding (Suffix G) Lug Capacities ①

Description	Minimum Wire Size	Maximum Wire Size	Wire Type
30 A, 60 A, 100 A DG	(7) #14	(7) #4	CU/AL
200 A DG	(3) #14	(3) #2	CU/AL
400 A, 600 A DG	(4) #6	(4) 250 kcmil	CU/AL
30 A, 60 A, 100 A DH	(7) #14	(7) #4	CU/AL
200 A DH Type 1 and 3R	(3) #14	(3) #2	CU/AL
200 A DH Type 4X and 12	(2) #14	(2) #2	CU/AL
400 A, 600 A, 800 A, 1200 A DH	(4) #6	(4) 250 kcmil	CU/AL
30 A, 60 A, 100 A DT	(7) #14	(7) #4	CU/AL
200 A DT	(5) #14	(5) #2	CU/AL
400 A DT	(6) #6	(6) 250 kcmil	CU/AL
600 A, 800 A, 1200 A DT	(6) #6	(6) 250 kcmil	CU/AL

Ground Lug Kit Capacities

Ground Lug Kit	Minimum Wire Size	Maximum Wire Size	Wire Type
DG030GB	#14	#4	CU/AL
DS100GK	(7) #14	(7) #4	CU/AL
DS200GK	(2) #14	(2) #2	CU/AL
DS468GK	(2) #6	(2) 250 kcmil	CU/AL

Note

① Additional Grounding is available as a Factory Modification, through the Switching Device Flex Center. Add Suffix G to the end of switch catalog number.

Supplied by Digital Stout Innovation & Trading FZE

Neutral Lug Kit Capacities

Neutral Kit	Minimum Wire Size	Maximum Wire Size	Wire Type
DG030NB	(2) #14	(2) #4	CU/AL
DG100NB	(3) #14	(3) #1/0	CU/AL
DG200NK	(2) #6	(2) 300 kcmil	CU/AL **and**
	(2) #14	(2) #2	
DH030NK	(4) #14	(4) #2	CU/AL
DH100NK	(2) #14	(2) #2	CU/AL **and**
	(2) #14	(2) #1/0	
DH200NK	(2) #14	(2) #2	CU/AL **and**
	(2) #6	(2) 300 kcmil	
DS400NK	(2) #1/0	(2) 750 kcmil	CU/AL **or**
	(4) #2	(4) 600 kcmil	**and**
	(3) #6	(3) 250 kcmil	
DS600NK	(2) #1/0	(2) 750 kcmil	CU/AL **and**
	(2) #2	(2) 600 kcmil	
	(3) #6	(3) 250 kcmil	
DS800NK	(8) #1/0	(8) 750 kcmil	CU/AL **and**
	(3) #6	(3) 250 kcmil	
DT100NK	#14	#2	CU/AL **and**
	(3) #14	(3) #1/0	
DT200NK	#14	#2	CU/AL **and**
	(3) #6	(3) 250 kcmil	
DT400NK	(7) #6	(7) 250 kcmil	CU/AL
DT600NK	#6	250 kcmil	CU/AL **and**
	(6) 250 kcmil	(6) 500 kcmil	
DS800NK	(3) #6	(3) 250 kcmil	CU/AL **and**
	(8) #1/0	(8) 750 kcmil	
DT800NK	(2) #6	(2) 250 kcmil	CU/AL **and**
	(9) 250 kcmil	(9) 500 kcmil	
DT1200NK	(3) #6	(3) 250 kcmil	CU/AL **and**
	(12) #1/0	(12) 750 kcmil	

Supplied by Digital Stout Innovation & Trading FZE

1

General-Duty

Short-Circuit Ratings Using Class "R", "J" or "T" Fusing Where Applicable ①

Ampere Rating	Short-Circuit Ratings (Amperes) Type 1	Type 3R
30	100 k at 240 V	100 k at 240 V
60	100 k at 240 V	100 k at 240 V
100	100 k at 240 V	100 k at 240 V
200	100 k at 240 V	100 k at 240 V
400	100 k at 250 V	100 k at 250 V
600	100 k at 250 V	100 k at 250 V

Shunt Trip Safety Switch

Short-Circuit Ratings Using Class "R," "J", "L" or "T" Fusing Where Applicable ②

Ampere Rating	480V	600V
30	200 kAIC	200 kAIC
60	200 kAIC	200 kAIC
100	200 kAIC	200 kAIC
200	200 kAIC	100 kAIC
400	200 kAIC	100 kAIC
600	200 kAIC	100 kAIC
800	200 kAIC	200 kAIC

Heavy-Duty

Short-Circuit Ratings Using Class "R," "J", "L" or "T" Fusing Where Applicable ①

Ampere Rating	Short-Circuit Ratings (Amperes) Type 1	Type 3R	Type 12	Type 4 and 4X
30	200 k at 600 V	200 k at 600 V	200 k at 600 V	200 k at 600 V
60	200 k at 600 V	200 k at 600 V	200 k at 600 V	200 k at 600 V
100	200 k at 480 V 100 k at 600 V	200 k at 480 V 100 k at 600 V	200 k at 600 V	200 k at 600 V
200	200 k at 600 V	200 k at 600 V	200 k at 600 V	200 k at 600 V
400	200 k at 480 V 100 k at 600 V	200 k at 480 V 100 k at 600 V	200 k at 480 V 100 k at 600 V	200 k at 480 V 100 k at 600 V
600	200 k at 480 V 100 k at 600 V	200 k at 480 V 100 k at 600 V	200 k at 480 V 100 k at 600 V	200 k at 480 V 100 k at 600 V
800 ③	200 k at 480 V 100 k at 600 V	200 k at 480 V 100 k at 600 V	200 k at 480 V 100 k at 600 V	200 k at 480 V 100 k at 600 V
1200 ③	200 k at 600 V	200 k at 600 V	200 k at 600 V	200 k at 600 V

Double Throw

Short-Circuit Ratings Using Class "R," "J," "L" or "T" Fusing where Applicable ③④⑤⑥⑦⑧⑨

Ampere Rating	Short-Circuit Ratings (Amperes) (600 V) Type 1	Type 3R	Type 12	Type 4 and 4X
30	100 k	100 k	100 k	100 k
60	100 k	100 k	100 k	100 k
100	100 k	100 k	100 k	100 k
200	100 k	100 k	100 k	100 k
400	100 k	100 k	100 k	100 k
600	100 k	100 k	100 k	100 k
800	100 k	100 k	—	—
1200	100 k	100 k	—	—

Notes

① Class "H" fuse clips supplied as standard for 30–600 A. Rated at 10,000 A rms symmetrical when using Class "H" fuses.

② Non-fusible values are based on combination rating with upstream device (see TD00801005E).

③ Class "L" fuse connectors supplied as standard for 800 A and 1200 A.

④ Class "H" fuse clips supplied as standard for 30–200 A and 400 A at 240 V. Rated at 10,000 A rms symmetrical when using Class "H" fuses.

⑤ Safety switch short-circuit ratings are applicable to AC only.

⑥ Safety switch I^2t and Ip values are identical to UL maximum acceptable I^2t and Ip values for the corresponding class fuse.

⑦ Table above is not applicable to the compact design shown on **Page V2-T1-47**. The compact design is suitable for use on a circuit capable of delivering not more than 10,000 rms symmetrical amperes.

⑧ Class T fuse clips supplied as standard for 400 A at 600 V.

⑨ Class J fuse clips supplied as standard for 600 A at 240 V and 600 V.

Supplied by Digital Stout Innovation & Trading FZE

Short-Circuit Ratings of Non-Fusible Switches

The UL listed short-circuit ratings for Eaton non-fusible switches are based on the switches being properly protected by overcurrent protective devices. For applications that require a UL listed short-circuit rating of 10,000 rms symmetrical amperes or less, an Eaton non-fusible switch must be properly protected by any overcurrent protective device rated no greater than the ampere rating of the switch.

For applications that require a UL listed short-circuit rating of greater than 10,000 rms symmetrical amperes, an Eaton non-fusible switch must be properly protected by the appropriate class and size fusing noted. Otherwise, this non-fusible switch must be replaced with an Eaton fusible switch that uses the appropriate fusing required.

Molded case circuit breaker protection of non-fusible Eaton switches for applications that require a short-circuit rating of greater than 10,000 rms symmetrical amperes has been evaluated and is summarized below. Refer to the reference tables for typical Eaton fusible switch UL listed short-circuit ratings.

UL Recognized Safety Switch/Circuit Breaker Series-Connected Ratings

Safety Switch Ampere Rating	Maximum System Voltage AC	Circuit Breaker Maximum Short-Circuit Rating (rms Symmetrical)	Circuit Breaker Frame(s)
30 and 60	600	25,000 18,000 14,000	FDC, HFD, HFDE, EGH FD, EGE FDB
100	600	25,000 18,000 14,000	FDC, HFD, HFDE, EGH FD, EGE FDB
	480	35,000	EGH, EGS
200	600	25,000 18,000 14,000	FDC, HFD, HFDE, HJD, JGH FD, JD, JGE FDB
	480	65,000	HFD, HFDE, HJD, JGH

Supplied by Digital Stout Innovation & Trading FZE

1

Product Enhancement

Eaton non-fusible safety switches now carry series combination short-circuit ratings when paired with the identified MCCB or fuse type. With this listed rating, the safety switch shown in the one-line diagram, can be correctly applied **when the motor feeder Eaton HMCP circuit breaker is replaced with an Eaton molded case circuit breaker** properly sized for the motor hp rating. This is a significant enhancement to the product's performance rating. To achieve these ratings, the switches have been tested in combination with all of the overcurrent devices shown. Furthermore, the applicable combination ratings are marked on the inside of the switch door, ensuring inspector approval.

One-Line Diagram

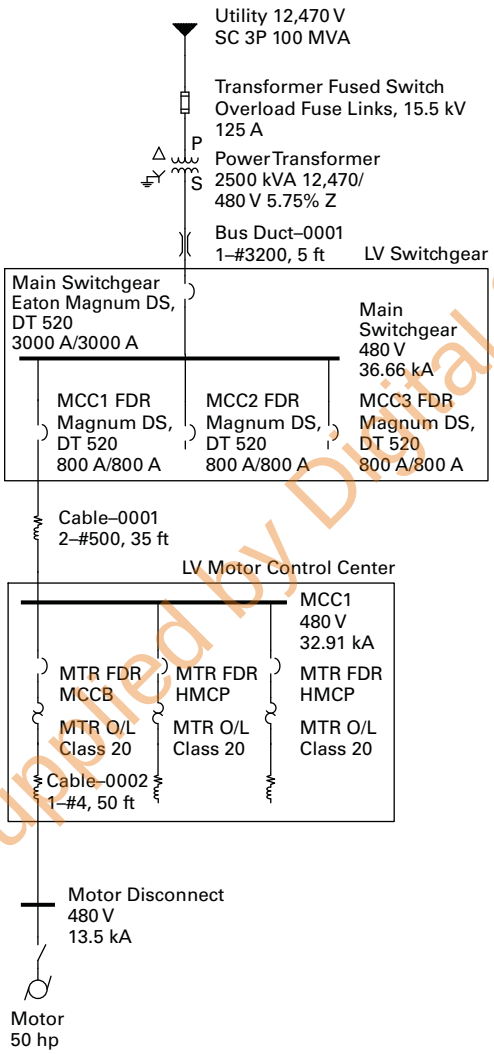

Information and Application

The circuit breaker or fuse rating is not to exceed the ampere rating of the non-fusible switch. When used on systems with greater than 10 kA short-circuit rating available, the UL Listed short-circuit rating of the non-fusible switch is based upon the switch being used in combination with fuses or molded case circuit breakers identified in the table below.

Non-Fusible Safety Switches

Eaton Non-Fusible Safety Switch Ampere Rating ①	Maximum System Voltage AC	Maximum Short-Circuit Rating	Upstream Device ② Fuse Class	Upstream Device ② Breaker Frame
30 and 60	600	10,000	H, K	Any circuit breaker
		14,000		FDB
		18,000		FD, EGE
		25,000		FDC, HFD, HFDE, EGH
		200,000	R, T, J, L	
100	480	10,000	H, K	Any circuit breaker
		35,000		EGH, EGS
		200,000	R, T, J, L	
	600	10,000	H, K	Any circuit breaker
		14,000		FDB
		18,000		FD, EGE
		25,000		FDC, HFD, HFDE, EGH
		200,000 ③	R, T, J, L	
200	480	10,000	H, K	Any circuit breaker
		65,000		HFD, HFDE, HJD, JGH
		200,000	R, T, J, L	
	600	10,000	H, K	Any circuit breaker
		14,000		FDB
		18,000		FD, JD, JGE
		25,000		FDC, HFD, HFDE, HJD, JGH
		200,000	R, T, J, L	
400	480	200,000	R, T, J	
	600	10,000	H, K	Any circuit breaker
		100,000	R, T, J	
600	480	200,000	R, T, J	
	600	10,000	H, K	Any circuit breaker
		100,000	R, T, J	
800	480	200,000	L, T	
	600	10,000		Any circuit breaker
		100,000	L, T	
1200	480	200,000	L, T	
	600	10,000		Any circuit breaker
		100,000	L, T	

Notes

① For use on NEMA 1, 3R, 12/3R and 4X switches.
② Fuse or circuit breaker rating is not to exceed switch rating.
③ NEMA 12, 4/4X only. NEMA 1, 3R are 100 kAIC at 600 Vac.

Supplied by Digital Stout Innovation & Trading FZE

Dimensions

Typical Fuse Dimensions in Inches

Note: For typical fuse dimensions in millimeters, see **Page V2-T1-24**.

Class T

T-Tron™ Fuses
JJN **(300 V)** JJS **(600 V)**

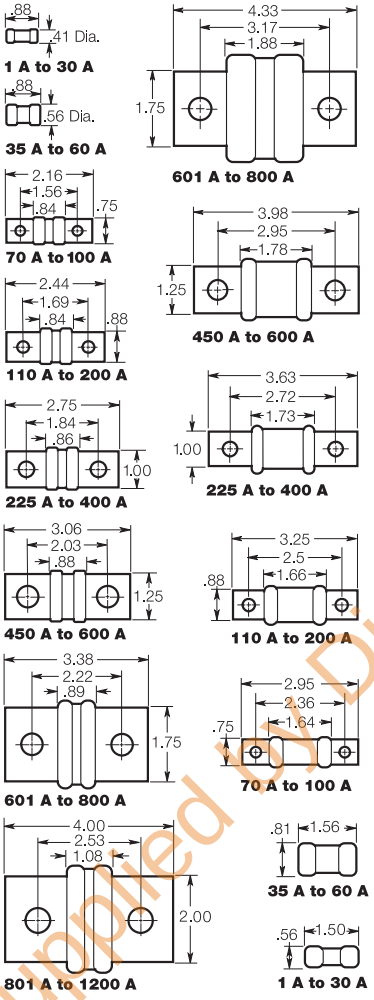

Class J

Low-Peak® and Limitron® Fuses
LPJ & JKS **(600 V)**

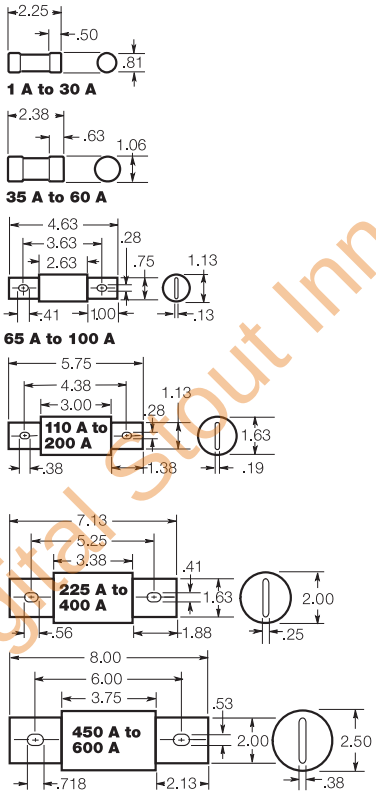

Class RK5 and RK1, Class H

(Dimensions Apply)

Fusetron®, Low-Peak and Limitron Fuses (250 and 600 V)
FRN-R and FRS-R; LPN-RK and LPS-RK; KTN-R and KTS-R
Basic dimensions are same as Class H (formerly NEC) ONE-TIME (NON and NOS) and SUPERLAG Renewable RES and REN fuses.

Note: These fuses can be used to replace existing Class H, RK1 and RK5 fuses relating to dimensional compatibility.

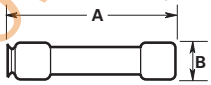

	250 V		600 V	
Ampere	A	B	A	B
1/10–30	2.00	0.56	5.00	0.81
35–60	3.00	0.81	5.50	1.06

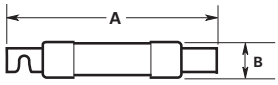

Fusetron and Limitron

	250 V		600 V	
Ampere	A	B	A	B
70–100	5.88	1.06	7.88	1.34
110–200	7.13	1.56	9.63	1.84
225–400	8.63	2.06	11.63	2.59
450–600	10.38	2.59	13.38	3.13

Low-Peak

	250 V		600 V	
Ampere	A	B	A	B
70–100	5.88	1.16	7.88	1.16
110–200	7.13	1.66	9.63	1.66
225–400	8.63	2.38	11.63	2.38
450–600	10.38	2.88	13.38	2.88

Class L Low-Peak and Limitron Fuses

KRP-C, KTU & KLU (601–4000 A) **(600 V)**

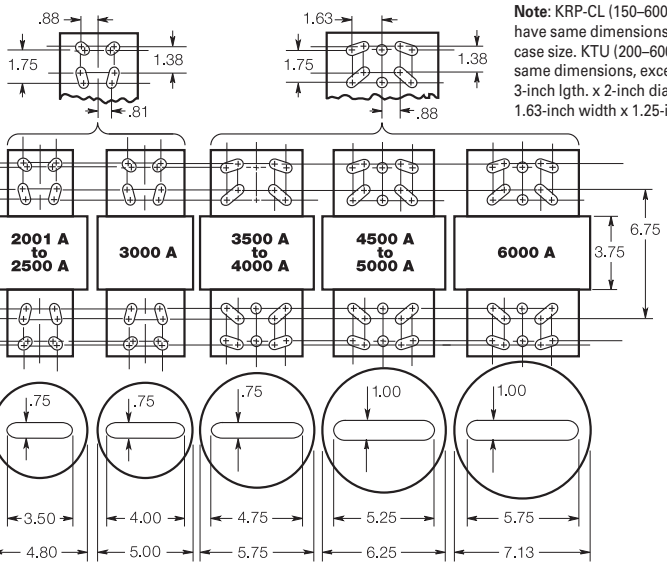

Note: KRP-CL (150–600A) fuses have same dimensions as 601–800 A case size. KTU (200–600 A) have same dimensions, except tube 3-inch lgth. x 2-inch dia.; terminal 1.63-inch width x 1.25-inch thick.

Supplied by Digital Stout Innovation & Trading FZE

1

Typical Fuse Dimensions in Millimeters

Class T

T-Tron Fuses

JJN **(300 V)** JJS **(600 V)**

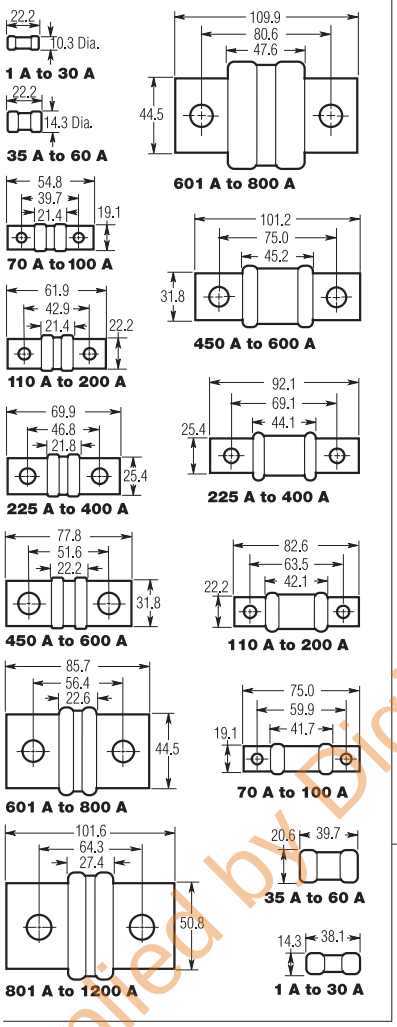

Class J

Low-Peak and Limitron Fuses

LPJ and JKS **(600 V)**

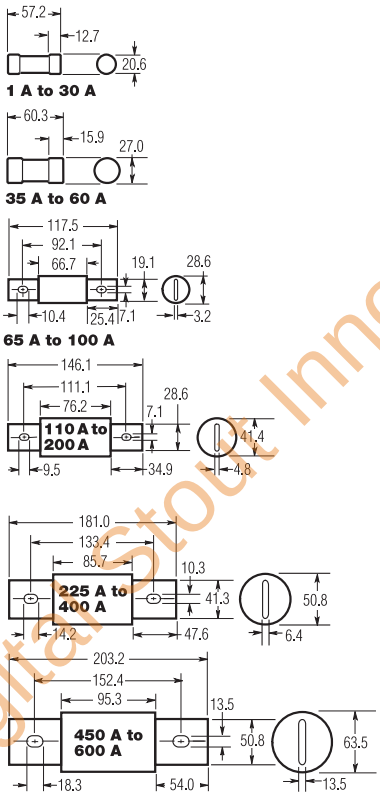

Class RK5 and RK1, Class H

Fusetron, Low-Peak and Limitron Fuses (250 and 600 V)

FRN-R and FRS-R; LPN-RK and LPS-RK; KTN-R and KTS-R

Basic dimensions are same as Class H (formerly NEC) ONE-TIME (NON and NOS) and SUPERLAG Renewable RES and REN fuses.

Note: These fuses can be used to replace existing Class H, RK1 and RK5 fuses relating to dimensional compatibility.

Ampere	250 V A	250 V B	600 V A	600 V B
1/10–30	50.8	14.3	127.0	20.6
35–60	76.2	20.6	139.7	27.0

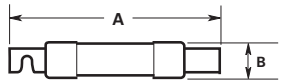

Fusetron and Limitron

Ampere	250 V A	250 V B	600 V A	600 V B
70–100	149.2	26.9	200.0	34.0
110–200	181.0	39.6	244.5	46.7
225–400	219.1	52.3	295.3	65.8
450–600	263.5	65.8	339.7	79.5

Low-Peak

Ampere	250 V A	250 V B	600 V A	600 V B
70–100	149.2	29.5	200.0	29.5
110–200	181.0	42.2	244.5	42.2
225–400	219.1	60.5	295.3	60.5
450–600	263.5	73.2	339.7	73.2

Class L Low-Peak and Limitron Fuses

KRP-C, KTU and KLU (601–4000 A) **(600 V)**

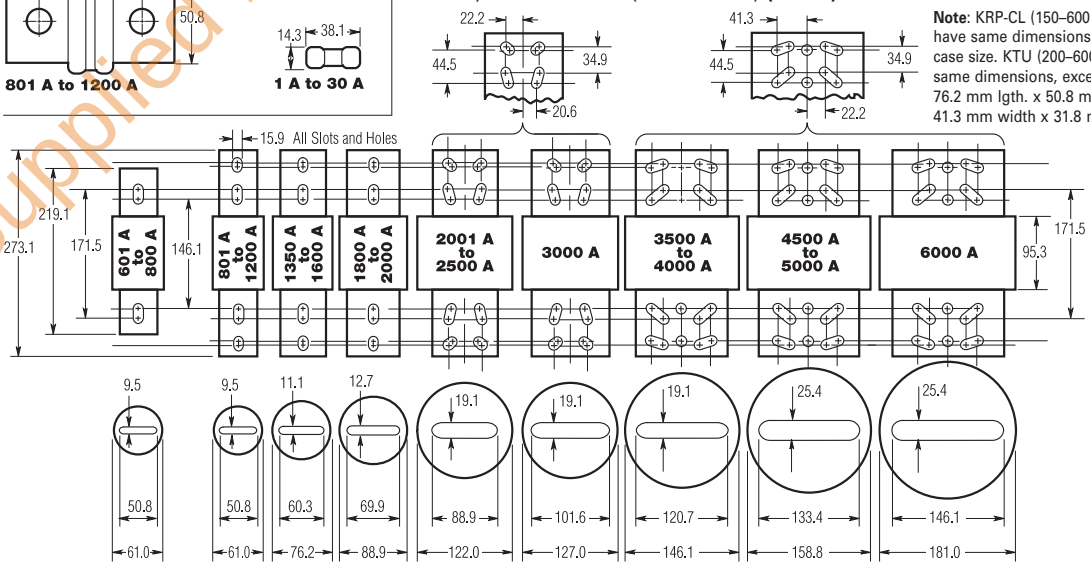

Note: KRP-CL (150–600 A) fuses have same dimensions as 601–800 A case size. KTU (200–600 A) have same dimensions, except tube 76.2 mm lgth. x 50.8 mm dia.; terminal 41.3 mm width x 31.8 mm thick.

Supplied by DigitalStout Innovation & Trading FZE

Cartridge Fuse General-Duty Safety Switch

Contents

Description	*Page*
Product Overview	**V2-T1-2**
General-Duty	**V2-T1-25**
Standards and Certifications	**V2-T1-26**
Product Selection	**V2-T1-27**
Dimensions	**V2-T1-29**
Heavy-Duty	**V2-T1-30**
Heavy-Duty Double Door Safety Switch	**V2-T1-39**
Six-Pole Switches	**V2-T1-43**
Double-Throw Switches	**V2-T1-46**
EnviroLine Stainless Steel Switch	**V2-T1-53**
Window Switches	**V2-T1-57**
Receptacle Switches	**V2-T1-60**
Non-Metallic KRYDON Switch	**V2-T1-62**
Shunt Trip Safety Switch	**V2-T1-65**
NEMA 7/9—Hazardous Location Disconnect Switch	**V2-T1-68**
Quick-Connect Switches	**V2-T1-70**
Solar Disconnect Switch	**V2-T1-75**
Mill-Duty Rated, Heavy-Duty Safety Switch	**V2-T1-77**
Elevator Control Switch	**V2-T1-79**
Auxiliary Power Heavy-Duty Safety Switch	**V2-T1-82**
Left-Handed Safety Switch	**V2-T1-86**
Heavy-Duty Surge Switch	**V2-T1-87**
OEM Line Isolation (OLI) Switch	**V2-T1-89**
Pringle Bolted Pressure Switch	**V2-T1-92**
Type DS, Fusible and Non-Fusible	**V2-T1-95**
Type Visi-Flex DE-ION	**V2-T1-98**
Flange Mounted—Variable Depth	**V2-T1-102**
Flange Mounted—Fixed Depth	**V2-T1-106**

General-Duty

Product Description

- 30–600 A
- Suitable for service entrance applications unless otherwise noted
- Fusible and non-fusible switches are 100% load break and 100% load make rated
- The continuous load current of fusible switches is not to exceed 80% of the rating of fuses employed in other than motor circuits. Non-fusible switches are 100% fully rated
- 200–600 A features K-Series design
- Horsepower rated
- Fusible and non-fusible switches, single-pole S/N through four-wire; 120/240, and 240 Vac
- With Class R fuses, switches may be used on systems capable of delivering 100,000 A rms symmetrical
- Bolt-on hub provision. Provided for general-duty switches in a NEMA 3R enclosure. See **Page V2-T1-14** for selection

Application Description

For residential and commercial applications. Suitable for light-duty motor circuits and service entrance.

Features, Benefits and Functions

- Ample wire bending space provides for easier installation
- Visible double-break quick-make, quick-break rotary blade mechanism
- Side opening door on all enclosures
- Mechanically interlocked cover to prevent easy access when the switch is in the ON position
- With Class R fuses, switches may be used on systems capable of delivering 100,000A rms symmetrical
- Clearly visible and accessible neutral where applicable
- Visible ON/OFF indication
- Tangential knockouts on 30–60 A designs
- Ample wiring space
- Double padlocking capability on 30–100 A
- Triple padlocking capability on 200–600 A
- Additional door locking capability
- Bilingual English/Spanish door label on 30–100 A
- Tri-lingual nameplates

Supplied by Digital Stout Innovation & Trading FZE

All general-duty switches above 100 A and all heavy-duty switches incorporate these K-Series switch design features.

- Two points of contact provide a positive open and close, easier operation, and also help prevent contact burning for longer contact life

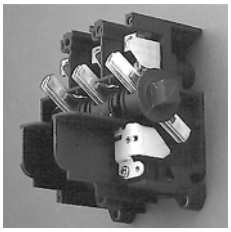

Visible Double-Break Rotary Blade Mechanism

- Protects against accidental contact with energized parts. Probe holes enable the user to test if the line side is energized without removing the shield. Not provided on general-duty switches, but available as a field kit or factory installed

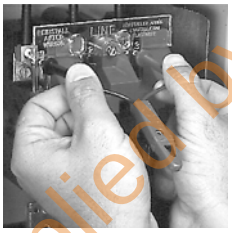

Clear Line Shield

Clearly Visible Handle

- The position (ON or OFF) can be clearly seen from a distance and the length provides for easy operation

Triple Padlocking Capability

- Personnel safety feature because the large hasp can accommodate up to three 3/8-inch (9.5 mm) shank locks

Additional Locking Capability

- Cabinet door can be further padlocked at the top and bottom as applicable

Interlocking Mechanism

- Door cannot be opened when the handle is in the ON position. Front and side operable defeater mechanism provides for user access when necessary on single-throw switches

Tangential Knockouts

- An ample number are provided on the top, bottom and sides of both NEMA Types 1 and 3R enclosures through 200 A

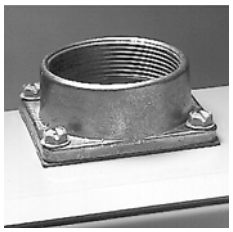

Bolt-On Hub Kits

- For switches in a NEMA Type 3R, 30–200 A. Use a Myers type hub for all others

Standards and Certifications

- UL listed File No. E5239
- Meets UL 98 for enclosed switches and NEMA Std. KS-1

UL Listed

Seismic Qualifications

- General-duty switches exceed the requirements of Uniform Building Code (UBC) and California Code Title 24 OSP-0011-10, OSP-0012-10

Supplied by Digital Stout Innovation & Trading FZE

Product Selection

120/240 Vac General-Duty, Fusible, Single-Throw

System	Ampere Rating	Fuse Type Provision	Maximum Horsepower Ratings Single-Phase AC 120 V	Single-Phase AC 240 V	Three-Phase AC 240 V	DC 250 V	NEMA 1 Enclosure Indoor Catalog Number	NEMA 3R Enclosure Rainproof Catalog Number
Cartridge Type—Two-Pole Two-Wire (Two Blades, Two Fuses)—240 Vac								
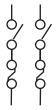	30	—	—	1-1/2–3	3–7-1/2	—	①	①
	60	—	—	3–10	7-1/2–15	—	①	①
	100	—	—	7-1/2–15	15–30	—	①	①
	200	H or R	—	15	25–60	—	**DG224FGK** ②③	**DG224FRK** ②③
	400	H or R	—	—	50–125	—	**DG225FGK** ②③	**DG225FRK** ②③
	600	H or R	—	—	75–200	—	**DG226FGK** ②③	**DG226FRK** ②③
Cartridge Type—Three-Wire (Two Blades, Two Fuses, S/N)—120/240 Vac								
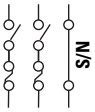	30	H or R	—	1-1/2–3	3–7-1/2 ④	—	**DG221NGB**	**DG221NRB**
	60	H or R	—	3–10	7-1/2–15 ④	—	**DG222NGB**	**DG222NRB**
	100	H or R	—	7-1/2–15	15–30 ④	—	**DG223NGB**	**DG223NRB**
	200	H or R	—	15	25–60 ④	—	**DG224NGK**	**DG224NRK**
	400	H or R	—	—	50–125 ④	50	**DG225NGK**	**DG225NRK**
	600	H or R	—	—	75–200 ④	—	**DG226NGK**	**DG226NRK**

Notes

① Use three-wire catalog numbers below.

② Solid neutral bars are not included. Order separately from table on **Page V2-T1-13**.

③ **WARNING!** Switch is not approved for service entrance unless a neutral kit is installed.

④ Grounded B phase rating, UL listed.

All general-duty safety switches are individually packaged.

Accessories are limited in scope on general-duty safety switches. See **Page V2-T1-13** for availability. In addition, clear line shields are available as an accessory on 200–600 A general-duty switches. Catalog Numbers: 200 A = 70-7759-11, 400 A = 70-8063-8, 600 A = 70-8064-8.

Supplied by Digital Stout Innovation & Trading FZE

1

DG321NRB

120/240 Vac General-Duty, Fusible, Single-Throw, continued

System	Ampere Rating	Fuse Type Provision	Maximum Horsepower Ratings ① Single-Phase AC 120 V	240 V	Three-Phase AC 240 V	DC 250 V	NEMA 1 Enclosure Indoor Catalog Number	NEMA 3R Enclosure Rainproof Catalog Number
Cartridge Type—Three-Pole, Three-Wire (Three Blades, Three Fuses)—240 Vac								
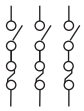	30	—	—	—	—	—	②	②
	60	—	—	—	—	—	②	②
	100	—	—	—	—	—	②	②
	200	H or R	—	15	25–60	—	**DG324FGK** ③④	②
	400	H or R	—	—	50–125	—	**DG325FGK** ③④	**DG325FRK** ③④
	600	H or R	—	—	75–200	—	**DG326FGK** ③④	**DG326FRK** ③④
Cartridge Type—Four-Wire (Three Blades, Three Fuses, S/N)—120/240 Vac								
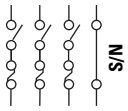	30	H or R	—	1-1/2–3	3–7-1/2	—	**DG321NGB**	**DG321NRB**
	60	H or R	—	3–10	7-1/2–15	—	**DG322NGB**	**DG322NRB**
	100	H or R	—	7-1/2–15	15–30	—	**DG323NGB**	**DG323NRB**
	200	H or R	—	15	25–60	—	**DG324NGK**	**DG324NRK**
	400	H or R	—	—	50–125	—	**DG325NGK**	**DG325NRK**
	600	H or R	—	—	75–200	—	**DG326NGK**	**DG326NRK**

DG322URB

120/240 Vac General-Duty, Non-Fusible, Single-Throw

System	Ampere Rating	Maximum Horsepower Ratings Single-Phase AC 120 V	240 V	Three-Phase AC 240 V	DC 250 V	NEMA 1 Enclosure Indoor Catalog Number	NEMA 3R Enclosure Rainproof Catalog Number
Two-Pole, Two-Wire (Two Blades)—240 Vac							
	30	2	3	—	—	**DG221UGB** ④	**DG221URB** ④
	60	3	10	—	—	**DG222UGB** ④	**DG222URB** ④
	100	—	15	—	—	**DG223UGB** ④	**DG223URB** ④
	200	—	15	—	—	④⑤	**DG224URK** ④
Three-Pole, Three-Wire (Three Blades)—240 Vac							
	30	2	3	7-1/2	—	**DG321UGB** ④	**DG321URB** ④
	60	3	10	15	—	**DG322UGB** ④	**DG322URB** ④
	100	—	15	30	—	**DG323UGB** ④	**DG323URB** ④
	200	—	15	60	—	**DG324UGK** ④	**DG324URK** ④
	400	—	—	125	—	**DG325UGK** ④	**DG325URK** ④
	600	—	—	200	—	**DG326UGK** ④	**DG326URK** ④

Notes

① Maximum hp ratings apply only when dual element time delay fuses are used.
② Use four-wire catalog numbers below.
③ Solid neutral bars are not included. Order separately from table on **Page V2-T1-13**.
④ **WARNING!** Switch is not approved for service entrance unless a neutral kit is installed.
⑤ Use three-wire catalog numbers below.

All general-duty safety switches are individually packaged.

Accessories are limited in scope on general-duty safety switches. See **Page V2-T1-13** for availability. In addition, clear line shields are available as an accessory on 200–600 A general-duty switches. Catalog Numbers: 200 A = 70-7759-11, 400 A = 70-8063-8, 600 A = 70-8064-8.

Supplied by Digital Stout Innovation & Trading FZE

Dimensions

Approximate Dimensions in Inches (mm)

General-Duty, Non-Fusible, 240 V, Three-Pole, Single-Throw ①

Ampere Rating	Width (W)	Height (H)	Depth (D)	Depth (D2)	Weight Lbs (kg)
NEMA 1					
30	6.38 (162.1)	10.69 (271.5)	6.88 (174.8)	3.75 (95.2)	6 (2.724)
60	8.69 (220.7)	14.19 (360.4)	7.38 (187.5)	4.21 (106.9)	9 (4.086)
100	9.13 (231.9)	18.81 (477.8)	7.38 (187.5)	4.23 (107.4)	12 (5.448)
200	16.00 (406.4)	24.75 (628.7)	11.25 (285.8)	6.14 (156.0)	48 (21.792)
400	23.00 (584.2)	44.75 (1136.7)	12.63 (320.8)	7.27 (184.7)	100 (45.4)
600	24.00 (609.6)	52.25 (1327.2)	14.25 (362.0)	8.95 (227.3)	130 (59.02)
NEMA 3R					
30	6.38 (162.1)	10.81 (274.6)	6.88 (174.8)	3.75 (95.2)	6 (2.724)
60	8.69 (220.7)	14.38 (365.3)	7.38 (187.5)	4.21 (106.9)	9 (4.086)
100	9.13 (231.9)	19.25 (489.0)	7.38 (187.5)	4.23 (107.4)	12 (5.448)
200	16.00 (406.4)	25.50 (647.7)	11.25 (285.8)	6.14 (156.0)	55 (24.97)
400	23.00 (584.2)	45.19 (1147.8)	12.63 (320.8)	7.27 (184.7)	105 (47.67)
600	24.00 (609.6)	52.70 (1338.6)	14.25 (362.0)	8.95 (227.3)	135 (61.29)

General-Duty, Fusible, 240 V, Three-Pole Solid Neutral, Single-Throw ①

Ampere Rating	Width (W)	Height (H)	Depth (D)	Depth (D2)	Weight Lbs (kg)
NEMA 1					
30	6.38 (162.1)	10.69 (271.5)	6.88 (174.8)	3.75 (95.2)	6 (2.724)
60	8.69 (220.7)	14.19 (360.4)	7.38 (187.5)	4.21 (106.9)	10 (4.54)
100	9.13 (231.9)	18.81 (477.8)	7.38 (187.5)	4.23 (107.4)	14 (6.356)
200	16.00 (406.4)	24.75 (628.7)	11.25 (285.8)	6.14 (156.0)	48 (21.792)
400	23.00 (584.2)	44.75 (1136.7)	12.63 (320.8)	7.27 (184.7)	110 (49.94)
600	24.00 (609.6)	52.25 (1327.2)	14.25 (362.0)	8.95 (227.3)	145 (65.83)
NEMA 3R					
30	6.38 (162.1)	10.81 (274.6)	6.88 (174.8)	3.75 (95.2)	6 (2.724)
60	8.69 (220.7)	14.38 (365.3)	7.38 (187.5)	4.21 (106.9)	10 (4.54)
100	9.13 (231.9)	19.25 (489.0)	7.38 (187.5)	4.23 (107.4)	14 (6.356)
200	16.00 (406.4)	25.50 (647.7)	11.25 (285.8)	6.14 (156.0)	55 (24.97)
400	23.00 (584.2)	45.19 (1147.8)	12.63 (320.8)	7.27 (184.7)	115 (52.21)
600	24.00 (609.6)	52.70 (1338.6)	14.25 (362.0)	8.95 (227.3)	150 (68.1)

NEMA 1, 3R 30–100 A General-Duty Non-Fusible and Fusible Single-Throw ②

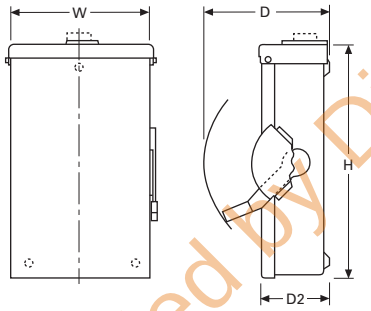

NEMA 1, 3R 200–600 A General-Duty Non-Fusible and Fusible Single-Throw

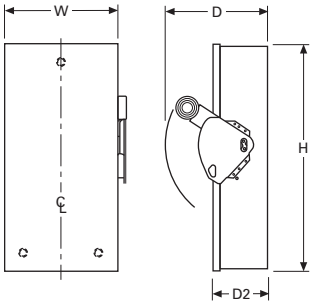

Notes

① Dimensions are for estimating purposes only.

② Figure is not applicable to plug fuse.

Supplied by Digital Stout Innovation & Trading FZE

1

Heavy-Duty Safety Switch

Contents

Description	*Page*
Product Overview	**V2-T1-2**
General-Duty	**V2-T1-25**
Heavy-Duty	
Standards and Certifications	**V2-T1-30**
Product Selection	**V2-T1-32**
Dimensions	**V2-T1-38**
Heavy-Duty Double Door Safety Switch	**V2-T1-39**
Six-Pole Switches	**V2-T1-43**
Double-Throw Switches	**V2-T1-46**
EnviroLine Stainless Steel Switch	**V2-T1-53**
Window Switches	**V2-T1-57**
Receptacle Switches	**V2-T1-60**
Non-Metallic KRYDON Switch	**V2-T1-62**
Shunt Trip Safety Switch	**V2-T1-65**
NEMA 7/9—Hazardous Location Disconnect Switch	**V2-T1-68**
Quick-Connect Switches	**V2-T1-70**
Solar Disconnect Switch	**V2-T1-75**
Mill-Duty Rated, Heavy-Duty Safety Switch	**V2-T1-77**
Elevator Control Switch	**V2-T1-79**
Auxiliary Power Heavy-Duty Safety Switch	**V2-T1-82**
Left-Handed Safety Switch	**V2-T1-86**
Heavy-Duty Surge Switch	**V2-T1-87**
OEM Line Isolation (OLI) Switch	**V2-T1-89**
Pringle Bolted Pressure Switch	**V2-T1-92**
Type DS, Fusible and Non-Fusible	**V2-T1-95**
Type Visi-Flex DE-ION	**V2-T1-98**
Flange Mounted—Variable Depth	**V2-T1-102**
Flange Mounted—Fixed Depth	**V2-T1-106**

Heavy-Duty

Product Description

- 30–1200 A
- 600 Vac, 600 Vdc maximum
- Horsepower rated
- Fusible and non-fusible switches are 100% load break and 100% load make rated
- The continuous load current of fusible switches is not to exceed 80% of the rating of fuses employed in other than motor circuits. Non-fusible switches are 100% fully rated
- Suitable for service entrance applications unless otherwise noted
- For factory modifications, refer to **Page V2-T1-15**

Application Description

For heavy commercial and industrial applications where reliable performance and service continuity are critical.

For the toughest heavy commercial and industrial applications, refer to **Page V2-T1-77** for catalog information on our mill-duty safety switch.

316-Grade stainless steel is often a desirable choice for wastewater treatment plants and petrochemical facilities.

Features, Benefits and Functions

- Deionizing arc chutes; arc chutes confine and suppress the arcs produced by opening contacts under load
- Mechanically interlocked cover to prevent easy access when the switch is in the ON position
- Clearly visible palm fitting red handle
- Premium 316-Grade stainless steel enclosures offer better corrosion resistance in the presence of most chemicals, salts and acids, and is more resistant to marine atmospheres
- Visible double-break quick-make, quick-break blades
- Visible ON/OFF indication
- 30–1200 A NEMA 12 designs convertible to NEMA 3R by opening factory-installed drain hole
- Tri-lingual nameplates

Standards and Certifications

- UL listed File No. E5239
- Meets UL 98 for enclosed switches and NEMA Std. KS-1

UL Listed

Seismic Qualifications

- Heavy-duty switches exceed the requirements of Uniform Building Code (UBC) and California Code Title 24 OSP-0011-10, OSP-0012-10

Supplied by Digital Stout Innovation & Trading FZE

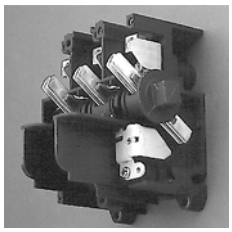

Visible Double-Break Rotary Blade Mechanism

- Two points of contact provide a positive open and close, easier operation, and also help prevent contact burning for longer contact life

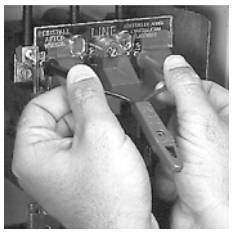

Clear Line Shield

- Protects against accidental contact with energized parts. Probe holes enable the user to test if the line side is energized without removing the shield. Not typically provided on general-duty switches, but available as a field kit or factory installed

Built-In Fuse Pullers (NEMA 12 and 4X 30–200A Only)

- Provide easy removal of fuses

Clearly Visible Handle

- The position (ON or OFF) can be clearly seen from a distance and the length provides for easy operation

Triple Padlocking Capability

- Personnel safety feature because the large hasp can accommodate up to three 3/8-inch (9.5 mm) shank locks

Additional Locking Capability

- Cabinet door can be further padlocked at the top and bottom as applicable

Interlocking Mechanism

- Door cannot be opened when the handle is in the ON position. Front and side operable defeater mechanism provides for user access when necessary on single-throw switches

Tangential Knockouts

- An ample number are provided on the top, bottom and sides of both NEMA Types 1 and 3R enclosures through 200A

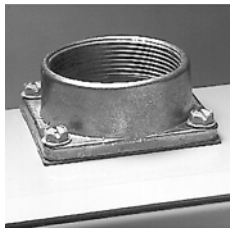

Bolt-On Hub Kits

- For switches in a NEMA Type 3R, 30–200 A. Use a Myers type hub for all others

Supplied by Digital Stout Innovation & Trading FZE

1

Product Selection

DH221NRK

240 Vac Heavy-Duty, Single-Throw, Fusible—NEMA 1, 3R, 12/3R

System	Ampere Rating	Fuse Type Provision	Maximum Horsepower Ratings AC Standard Fuse Single-Phase	Standard Fuse Three-Phase	Time Delay Single-Phase	Time Delay Three-Phase	DC 250 V	NEMA 1 Enclosure Indoor Catalog Number	NEMA 3R Enclosure Rainproof Catalog Number	NEMA 12/3R Enclosure Industrial, Dust-Tight Catalog Number
Two-Pole—240 Vac, 250 Vdc (Suitable for Service Entrance Use with a Neutral Kit Installed)										
	30	H or R	1-1/2	—	—	—	5	**DH221FGK** ①	③	③
	60	—	—	—	—	—	—	③	③	③
	100	—	—	—	—	—	—	③	③	③
	200	—	—	—	—	—	—	③	③	③
	400	H or R	—	50 ①②	—	125 ①②	50	**DH225FGK**	**DH225FRK**	**DH225FDK** ⑤
	600	H or R	—	75 ①②	—	200 ①②	—	**DH226FGK**	**DH226FRK**	**DH226FDK** ⑤
	800	L	—	100 ①②	—	—	—	**DH227FGK**	—	**DH227FDK** ⑤
Three-Wire (Two Blades, Two Fuses, S/N)—240 Vac, 250 Vdc										
S/N	30	H or R	1-1/2	3 ④	3	7-1/2 ④	5	**DH221NGK** ①	**DH221NRK** ①	**DH221NDK** ①⑤
	60	H or R	3	7-1/2 ④	10	15 ④	10	**DH222NGK**	**DH222NRK**	**DH222NDK** ⑤
	100	H or R	7-1/2	15 ④	15	30 ④	20	**DH223NGK**	**DH223NRK**	**DH223NDK** ⑤
	200	H or R	15	25 ④	15	60 ④	40	**DH224NGK**	**DH224NRK**	**DH224NDK** ⑤
	400	H or R	—	50 ④	—	125 ④	50	**DH225NGK**	**DH225NRK**	**DH225NDK** ⑤
	600	H or R	—	75 ④	—	200 ④	—	**DH226NGK**	**DH226NRK**	**DH226NDK** ⑤
	800	L	—	100 ④	—	—	—	**DH227NGK**	**DH227NRK**	**DH227NDK** ⑤
Three-Pole—240 Vac, 250 Vdc (Suitable for Service Entrance Use with a Neutral Kit Installed)										
	30	H or R	1-1/2	3	3	7-1/2	5	**DH321FGK** ①	**DH321FRK** ①	**DH321FDK** ①⑤
	60	H or R	3	7-1/2	10	15	10	**DH322FGK**	**DH322FRK**	**DH322FDK** ⑤
	100	H or R	7-1/2	15	15	30	20	**DH323FGK**	**DH323FRK**	**DH323FDK** ⑤
	200	H or R	15	25	15	60	40	**DH324FGK**	**DH324FRK**	**DH324FDK** ⑤
	400	H or R	—	50	—	125	50	**DH325FGK**	**DH325FRK**	**DH325FDK** ⑤
	600	H or R	—	75	—	200	—	**DH326FGK**	**DH326FRK**	**DH326FDK** ⑤
	800	L	—	100	—	—	—	**DH327FGK**	**DH327FRK**	**DH327FDK** ⑤
	1200	L	—	—	—	—	—	**DH328FGK**	**DH328FRK**	**DH328FDK** ⑤
Four-Wire (Three Blades, Three Fuses, S/N)—240 Vac, 250 Vdc										
S/N	30	H or R	1-1/2	3	3	7-1/2	5	**DH321NGK** ①	**DH321NRK** ①	**DH321NDK** ①⑤
	60	H or R	3	7-1/2	10	15	10	**DH322NGK**	**DH322NRK**	**DH322NDK** ⑤
	100	H or R	7-1/2	15	15	30	20	**DH323NGK**	**DH323NRK**	**DH323NDK** ⑤
	200	H or R	15	25	15	60	40	**DH324NGK**	**DH324NRK**	**DH324NDK** ⑤
	400	H or R	—	50	—	125	50	**DH325NGK**	**DH325NRK**	**DH325NDK** ⑤
	600	H or R	—	75	—	200	—	**DH326NGK**	**DH326NRK**	**DH326NDK** ⑤
	800	L	—	100	—	—	—	**DH327NGK**	**DH327NRK**	**DH327NDK** ⑤⑥
	1200	L	—	—	—	—	—	**DH328NGK**	**DH328NRK**	**DH328NDK** ⑤
Four-Pole—240 Vac, 250 Vdc										
	30	H or R	3	3	10	7-1/2	5	**DH421FGK** ①	⑤	**DH421FDK** ①⑤
	60	H or R	7-1/2	7-1/2	20	15	10	**DH422FGK**	⑤	**DH422FDK** ⑤
	100	H or R	15	15	30	30	20	**DH423FGK**	⑤	**DH423FDK** ⑤
	200	H or R	30	25	50	60	40	**DH424FGK**	⑤	**DH424FDK** ⑤
	400	H or R	50	50	—	125	50	**DH425FGK**	⑤⑥	⑤⑥
	600	H or R	—	75	—	200	—	**DH426FGK**	⑤⑥	⑤⑥

Notes

① 30A heavy-duty switches with Type J fuse provisions are available from the factory only.
② Horsepower ratings apply only when neutral is field installed and switch is used on a grounded B phase system.
③ Use three-pole catalog numbers below.
④ Grounded B phase ratings, UL listed.
⑤ Use NEMA 12. NEMA 12 enclosures (30–1200 A) can be field modified to meet NEMA 3R rainproof requirements when a factory provided drain hole is opened.
⑥ Contact the Safety Switch Flex Center (**1-888-329-9272** or FlexSwitches@eaton.com) for availability of this product.

Supplied by Digital Stout Innovation & Trading FZE

DH322FWK

240 Vac Heavy-Duty, Single-Throw, Fusible—NEMA 4, 4X, 4X 316 Stainless-Steel

System	Ampere Rating	Fuse Type Provision	Maximum Horsepower Ratings AC Standard Fuse Single-Phase	Standard Fuse Three-Phase	Time Delay Single-Phase	Time Delay Three-Phase	DC 250 V	NEMA 4 Enclosure Watertight, Painted Steel Catalog Number	NEMA 4X Enclosure Corrosion-Resistant, Stainless Steel Catalog Number	NEMA 4X Enclosure Corrosion-Resistant, 316-Grade Stainless Steel Catalog Number
Two-Pole—240 Vac, 250 Vdc (Suitable for Service Entrance Use with a Neutral Kit Installed)										
	30	H or R	1-1/2	—	—	—	5	—	③	③
	60	—	—	—	—	—	—	—	③ or ④	③ or ④
	100	—	—	—	—	—	—	—	④	④
	200	—	—	—	—	—	—	—	④	④
	400	H or R	—	50 ①	—	125 ①	50	**DH225FPK**	④	④
	600	H or R	—	75 ①	—	200 ①	—	**DH226FPK**	④	④
	800	L	—	100 ①	—	—	—	—	④	④
Three-Wire (Two Blades, Two Fuses, S/N)—240 Vac, 250 Vdc										
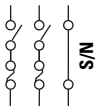	30	H or R	1-1/2	3 ②	3	7-1/2 ②	5	—	**DH221NWK** ⑤	**DH221NWK316** ⑤
	60	H or R	3	7-1/2 ②	10	15 ②	10	—	**DH222NWK**	**DH222NWK316**
	100	H or R	7-1/2	15 ②	15	30 ②	20	—	**DH223NWK**	**DH223NWK316**
	200	H or R	15	25 ②	15	60 ②	40	—	**DH224NWK**	**DH224NWK316**
	400	H or R	—	50 ②	—	125 ②	50	**DH225NPK**	**DH225NWK**	**DH225NWK316**
	600	H or R	—	75 ②	—	200 ②	—	**DH226NPK**	**DH226NWK**	**DH226NWK316**
	800	L	—	100 ②	—	—	—	**DH227NPK**	**DH227NWK**	**DH227NWK316**
Three-Pole—240 Vac, 250 Vdc (Suitable for Service Entrance Use with a Neutral Kit Installed)										
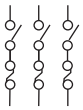	30	H or R	1-1/2	3	3	7-1/2	5	—	**DH321FWK** ⑤	**DH321FWK316** ⑤
	60	H or R	3	7-1/2	10	15	10	—	**DH322FWK**	**DH322FWK316**
	100	H or R	7-1/2	15	15	30	20	—	**DH323FWK**	**DH323FWK316**
	200	H or R	15	25	15	60	40	—	**DH324FWK**	**DH324FWK316**
	400	H or R	—	50	—	125	50	**DH325FPK**	**DH325FWK**	**DH325FWK316**
	600	H or R	—	75	—	200	—	**DH326FPK**	**DH326FWK**	**DH326FWK316**
	800	L	—	100	—	—	—	**DH327FPK**	**DH327FWK**	**DH327FWK316**
	1200	L	—	—	—	—	—	—	**DH328FWK**	**DH328FWK316**
Four-Wire (Three Blades, Three Fuses, S/N)—240 Vac, 250 Vdc										
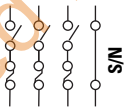	30	H or R	1-1/2	3	3	7-1/2	5	—	**DH321NWK** ⑤	**DH321NWK316** ⑤
	60	H or R	3	7-1/2	10	15	10	—	**DH322NWK**	**DH322NWK316**
	100	H or R	7-1/2	15	15	30	20	—	**DH323NWK**	**DH323NWK316**
	200	H or R	15	25	15	60	40	—	**DH324NWK**	**DH324NWK316**
	400	H or R	—	50	—	125	50	**DH325NPK**	**DH325NWK**	**DH325NWK316**
	600	H or R	—	75	—	200	—	**DH326NPK**	**DH326NWK**	**DH326NWK316**
	800	L	—	100	—	—	—	—	④	④
	1200	L	—	—	—	—	—	—	**DH328NWK**	**DH328NWK316**
Four-Pole—240 Vac, 250 Vdc										
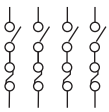	30	H or R	3	3	10	7-1/2	5	—	④	④
	60	H or R	7-1/2	7-1/2	20	15	10	—	④	④
	100	H or R	15	15	30	30	20	—	④	④
	200	H or R	30	25	50	60	40	—	④	④
	400	H or R	50	50	—	125	50	—	④	④
	600	H or R	—	75	—	200	—	—	④	④

Notes

① Horsepower ratings apply only when neutral is field installed and switch is used on a grounded B phase system.
② Grounded B phase ratings, UL listed.
③ Use three-pole catalog numbers below.
④ Contact the Safety Switch Flex Center (**1-888-329-9272** or FlexSwitches@eaton.com) for availability of this product.
⑤ 30 A heavy-duty switches with Type J fuse provisions are available from the factory only.

Supplied by Digital Stout Innovation & Trading FZE

1

DH362NRK

600 Vac Heavy-Duty, Fusible, Single-Throw, 277/480–600 V—NEMA 1, 3R, 12/3R

System	Ampere Rating	Fuse Class Provision	Maximum Horsepower Ratings with Time Delay Fuses Single-Phase AC 480 V	Single-Phase AC 600 V	Three-Phase AC 480 V	Three-Phase AC 600 V	DC 250 V	DC 600 V	NEMA 1 Enclosure Indoor Catalog Number	NEMA 3R Enclosure Rainproof Catalog Number	NEMA 12/3R ① Enclosure Industrial, Dust-Tight Catalog Number
Two-Pole—480 Vac—600 Vac or Vdc ② (Suitable for Service Entrance Use with a Neutral Kit Installed)											
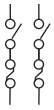	30	H or R	7-1/2	10	—	—	—	15	**DH261FGK** ③	**DH261FRK** ③	**DH261FDK** ③
	60	H or R	20	25	—	—	—	25	**DH262FGK**	**DH262FRK**	**DH262FDK**
	100	H or R	30	40	—	—	20	25	**DH263FGK**	**DH263FRK**	**DH263FDK**
	200	H or R	50	50	—	—	40	50	**DH264FGK**	**DH264FRK**	**DH264FDK**
	400	H or R	—	—	—	—	50	—	**DH265FGK**	**DH265FRK**	**DH265FDK**
	600	H or R	—	—	—	—	50	—	**DH266FGK**	**DH266FRK**	**DH266FDK**
	800	L	—	—	—	—	—	—	**DH267FGK**	**DH267FRK**	**DH267FDK**
	1200	L	—	—	—	—	—	—	④	—	④
Three-Pole—480 Vac—600 Vac, 250 Vdc (Suitable for Service Entrance Use with a Neutral Kit Installed)											
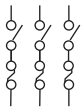	30	H or R	7-1/2	10	15	20	—	—	**DH361FGK** ③	**DH361FRK** ③	**DH361FDK** ③
	60	H or R	20	25	30	50	—	—	**DH362FGK**	**DH362FRK**	**DH362FDK**
	100	H or R	30	40	60	75	—	—	**DH363FGK**	**DH363FRK**	**DH363FDK**
	200	H or R	50	50	125	150	—	—	**DH364FGK**	**DH364FRK**	**DH364FDK**
	400	H or R	—	—	250	350	—	—	**DH365FGK**	**DH365FRK**	**DH365FDK**
	600	H or R	—	—	400	500	—	—	**DH366FGK**	**DH366FRK**	**DH366FDK**
	800	L	—	—	500	500	—	—	**DH367FGK**	**DH367FRK**	**DH367FDK**
	1200	L	—	—	500	500	—	—	**DH368FGK** ⑥	**DH368FRK** ⑥	**DH368FDK** ⑥
Four-Wire (Three Blades, Three Fuses, S/N) 480 Vac—600 Vac, 250 Vdc											
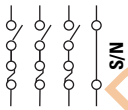	30	H or R	7-1/2	10	15	20	—	—	**DH361NGK** ③	**DH361NRK** ③	**DH361NDK** ③
	60	H or R	20	25	30	50	—	—	**DH362NGK**	**DH362NRK**	**DH362NDK**
	100	H or R	30	40	60	75	—	—	**DH363NGK**	**DH363NRK**	**DH363NDK**
	200	H or R	50	50	125	150	—	—	**DH364NGK**	**DH364NRK**	**DH364NDK**
	400	H or R	—	—	250	350	—	—	**DH365NGK**	**DH365NRK**	**DH365NDK**
	600	H or R	—	—	400	500	—	—	**DH366NGK**	**DH366NRK**	**DH366NDK**
	800	L	—	—	500	500	—	—	**DH367NGK**	**DH367NRK**	**DH367NDK**
	1200	L	—	—	500	500	—	—	**DH368NGK** ⑥	**DH368NRK** ⑥	**DH368NDK** ⑥
Four-Pole—480 Vac—600 Vac, 250 Vdc											
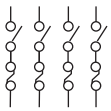	30	H or R	20 ⑤	25 ⑤	15	20	—	—	**DH461FGK** ③	①	④
	60	H or R	40 ⑤	50 ⑤	30	50	—	—	**DH462FGK**	①	④
	100	H or R	50 ⑤	50 ⑤	60	75	—	—	**DH463FGK**	①	**DH463FDK**
	200	H or R	—	—	125	150	40	—	**DH464FGK**	①	**DH464FDK**
	400	H or R	—	—	250	350	50	—	**DH465FGK**	①④	④
	600	H or R	—	—	400	500	—	—	**DH466FGK**	①④	④
	800	L	—	—	—	—	—	—	③	①④	④

Notes

① NEMA 12 enclosures (30–1200 A) can be field modified to meet NEMA 3R rainproof requirements when a factory provided drain hole is opened.
② DC rating for 800 A switches is 250 V.
③ 30 A heavy-duty switches with Type J fuse provisions are available from the factory only.
④ Contact the Safety Switch Flex Center (**1-888-329-9272** or FlexSwitches@eaton.com) for availability of this product.
⑤ Ratings are for two-phase AC.
⑥ 1200 A/480 V service entrance must include ground fault protection to meet NEC 230.95; see Shunt Trip Safety Switches on **page V2-T1-65**.

Supplied by Digital Stout Innovation & Trading FZE

600 Vac Heavy-Duty, Fusible, Single-Throw, 277/480–600 V—NEMA 4, 4X, 4X 316 Stainless-Steel

System	Ampere Rating	Fuse Class Provision	Maximum Horsepower Ratings with Time Delay Fuses						NEMA 4 Enclosure Watertight, Painted Steel Catalog Number	NEMA 4X Enclosure Corrosion-Resistant, Stainless Steel Catalog Number	NEMA 4X Enclosure Corrosion-Resistant, 316-Grade Stainless Steel Catalog Number
			Single-Phase AC		Three-Phase AC		DC				
			480 V	600 V	480 V	600 V	250 V	600 V			
Two-Pole—480 Vac—600 Vac or Vdc ① (Suitable for Service Entrance Use with a Neutral Kit Installed)											
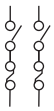	30	H or R	7-1/2	10	—	—	—	15	—	**DH261FWK** ②	**DH261FWK316** ②
	60	H or R	20	25	—	—	—	25	—	③ or ④	③ or ④
	100	H or R	30	40	—	—	20	—	—	③ or ④	③ or ④
	200	H or R	50	50	—	—	—	50	—	**DH264FWK**	**DH264FWK316**
	400	H or R	—	—	—	—	50	—	④	③ or ④	③ or ④
	600	H or R	—	—	—	—	—	—	④	③ or ④	③ or ④
	800	L	—	—	—	—	—	—	④	③ or ④	③ or ④
	1200	L	—	—	—	—	—	—	—	④	③
Three-Pole—480 Vac—600 Vac, 250 Vdc (Suitable for Service Entrance Use with a Neutral Kit Installed)											
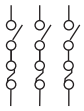	30	H or R	7-1/2	10	15	20	—		—	**DH361FWK** ②	**DH361FWK316** ②
	60	H or R	20	25	30	50	—		—	**DH362FWK**	**DH362FWK316**
	100	H or R	30	40	60	75	—		—	**DH363FWK**	**DH363FWK316**
	200	H or R	50	50	125	150	—		—	**DH364FWK**	**DH364FWK316**
	400	H or R	—	—	250	350	—		**DH365FPK**	**DH365FWK**	**DH365FWK316**
	600	H or R	—	—	400	500	—		**DH366FPK**	**DH366FWK**	**DH366FWK316**
	800	L	—	—	500	500	—		**DH367FPK**	**DH367FWK**	**DH367FWK316**
	1200	L	—	—	500	500	—		—	**DH368FWK** ⑤	**DH368FWK316** ⑤
Four-Wire (Three Blades, Three Fuses, S/N) 480 Vac—600 Vac, 250 Vdc											
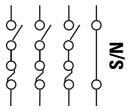	30	H or R	7-1/2	10	15	20	—		—	**DH361NWK** ②	**DH361NWK316** ②
	60	H or R	20	25	30	50	—		—	**DH362NWK**	**DH362NWK316**
	100	H or R	30	40	60	75	—		—	**DH363NWK**	**DH363NWK316**
	200	H or R	50	50	125	150	—		—	**DH364NWK**	**DH364NWK316**
	400	H or R	—	—	250	350	—		**DH365NPK**	**DH365NWK**	**DH365NWK316**
	600	H or R	—	—	400	500	—		**DH366NPK**	**DH366NWK**	**DH366NWK316**
	800	L	—	—	500	500	—		—	**DH367NWK**	**DH367NWK316**
	1200	L	—	—	500	500	—		—	**DH368NWK** ⑤	**DH368NWK316** ⑤
Four-Pole—480 Vac—600 Vac, 250 Vdc											
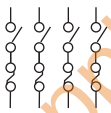	30	H or R	20 ⑥	25 ⑥	15	20	—		—	③	③
	60	H or R	40 ⑥	50 ⑥	30	50	—		—	③	③
	100	H or R	50 ⑥	50 ⑥	60	75	—		—	③	③
	200	H or R	—	—	125	150	40		—	③	③
	400	H or R	—	—	250	350	50		—	③	③
	600	H or R	—	—	400	500	—		—	③	③
	800	L	—	—	—	—	—		—	③	③

Notes

① DC rating for 800 A switches is 250 V.
② 30 A heavy-duty switches with Type J fuse provisions are available from the factory only.
③ Contact the Safety Switch Flex Center (**1-888-329-9272** or FlexSwitches@eaton.com) for availability of this product.
④ Use three-pole catalog numbers below for 600 Vac, 250 Vdc maximum applications.
⑤ 1200 A is not service entrance rated at 600 V.
⑥ Ratings are for two-phase AC.

Supplied by Digital Stout Innovation & Trading FZE

1

DH362UGK

600 Vac Heavy-Duty, Non-Fusible, Single-Throw, 277/480–600 V—NEMA 1, 3R, 12/3R

System	Ampere Rating	Maximum Horsepower Ratings Single-Phase AC 240 V	480 V	600 V	Three-Phase AC 240 V	480 V	600 V	DC 250 V	600 V	NEMA 1 Enclosure Indoor Catalog Number	NEMA 3R Enclosure Rainproof Catalog Number	NEMA 12/3R Enclosure Industrial, Dust-Tight Catalog Number
Two-Pole—480 Vac—600 Vac or Vdc ① (Suitable for Service Entrance Use with a Neutral Kit Installed)												
	30	3	7-1/2	10	—	—	—	—	15	**DH261UGK**	**DH261URK**	**DH261UDK** ⑤
	60	10	20	25	—	—	—	—	25	**DH262UGK**	**DH262URK**	**DH262UDK** ⑤
	100	20	30	40	—	—	—	20	25	**DH263UGK**	**DH263URK**	**DH263UDK** ⑤
	200	15	50	50	—	—	—	—	50	**DH264UGK**	**DH264URK**	**DH264UDK** ⑤
	400	—	—	—	—	—	—	50	50	**DH265UGK**	**DH265URK**	**DH265UDK** ⑤
	600	—	—	—	—	—	—	—	50	**DH266UGK**	**DH266URK**	**DH266UDK** ⑤
	800	—	—	—	—	—	—	—	—	**DH267UGK**	**DH267URK**	**DH267UDK** ⑤
	1200	—	—	—	—	—	—	—	—	②	—	②
Three-Pole—480 Vac—600 Vac, 250 Vdc (Suitable for Service Entrance Use with a Neutral Kit Installed)												
	30	3	7-1/2	10	10	20	30	5	—	**DH361UGK**	**DH361URK**	**DH361UDK** ⑤
	60	10	20	25	20	50	60	10	—	**DH362UGK**	**DH362URK**	**DH362UDK** ⑤
	100	20	40	50	40	75	100	20	—	**DH363UGK**	**DH363URK**	**DH363UDK** ⑤
	200	15	50	50	60	125	150	40	—	**DH364UGK**	**DH364URK**	**DH364UDK** ⑤
	400	—	—	—	125	250	350	50	—	**DH365UGK**	**DH365URK**	**DH365UDK** ⑤
	600	—	—	—	200	400	500	—	—	**DH366UGK**	**DH366URK**	**DH366UDK** ⑤
	800	—	—	—	—	500	500	—	—	**DH367UGK**	**DH367URK**	**DH367UDK** ⑤
	1200	—	—	—	—	500	500	—	—	**DH368UGK** ③	**DH368URK** ③	**DH368UDK** ③
Four-Pole—480 Vac—600 Vac, 250 Vdc												
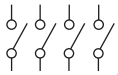	30	10 ④	20 ④	25 ④	10	20	30	5	—	**DH461UGK**	⑤	**DH461UDK** ⑤
	60	20 ④	40 ④	50 ④	20	50	60	10	—	**DH462UGK**	⑤	**DH462UDK** ⑤
	100	40 ④	50 ④	50 ④	40	75	100	20	—	**DH463UGK**	⑤	**DH463UDK** ⑤
	200	50 ④	50 ④	50 ④	60	125	150	40	—	**DH464UGK**	⑤	**DH464UDK** ⑤
	400	50 ④	—	—	125	250	350	50	—	**DH465UGK**	②⑤	②⑤
	600	—	—	—	200	400	500	—	—	**DH466UGK**	②⑤	②⑤
	800	—	—	—	—	—	—	—	—	②	②⑤	②⑤

Notes

① DC rating for 800 A switches is 250 V.

② Contact the Safety Switch Flex Center (**1-888-329-9272** or FlexSwitches@eaton.com) for availability of this product.

③ 1200 A/480 V service entrance must include ground fault protection to meet NEC 230.95; see Shunt Trip Safety Switches on **page V2-T1-65**.

④ Ratings are for two-phase AC.

⑤ NEMA 12 enclosures (30–1200 A) can be field modified to meet NEMA 3R rainproof requirements when a factory provided drain hole is opened.

Supplied by Digital Stout Innovation & Trading FZE

DH361UWK

600 Vac Heavy-Duty, Non-Fusible, Single-Throw, 277/480–600 V—NEMA 4, 4X, 4X 316 Stainless Steel

System	Ampere Rating	Maximum Horsepower Ratings Single-Phase AC 240 V	480 V	600 V	Three-Phase AC 240 V	480 V	600 V	DC 250 V	600 V	NEMA 4 Enclosure Watertight, Painted Steel Catalog Number	NEMA 4X Enclosure Corrosion-Resistant, Stainless Steel Catalog Number	NEMA 4X Enclosure Corrosion-Resistant, 316-Grade Stainless Steel Catalog Number
Two-Pole—480 Vac—600 Vac or Vdc ① (Suitable for Service Entrance Use with a Neutral Kit Installed)												
	30	3	7-1/2	10	—	—	—	—	15	—	② or ③	② or ③
	60	10	20	25	—	—	—	—	25	—	② or ③	② or ③
	100	20	30	40	—	—	—	20	25	—	② or ③	② or ③
	200	15	50	50	—	—	—	—	50	—	② or ③	② or ③
	400	—	—	—	—	—	—	50	—	③	② or ③	② or ③
	600	—	—	—	—	—	—	—	—	③	② or ③	② or ③
	800	—	—	—	—	—	—	—	—	③	② or ③	② or ③
	1200	—	—	—	—	—	—	—	—	—	②	②
Three-Pole—480 Vac—600 Vac, 250 Vdc (Suitable for Service Entrance Use with a Neutral Kit Installed)												
	30	3	7-1/2	10	10	20	30	5	—	—	**DH361UWK**	**DH361UWK316**
	60	10	20	25	20	50	60	10	—	—	**DH362UWK**	**DH362UWK316**
	100	20	40	50	40	75	100	20	—	—	**DH363UWK**	**DH363UWK316**
	200	15	50	50	60	125	150	40	—	—	**DH364UWK**	**DH364UWK316**
	400	—	—	—	125	250	350	50	—	**DH365UPK**	**DH365UWK**	**DH365UWK316**
	600	—	—	—	200	400	500	—	—	**DH366UPK**	**DH366UWK**	**DH366UWK316**
	800	—	—	—	500	500	—	—	—	**DH367UPK**	**DH367UWK**	**DH367UWK316**
	1200	—	—	—	500	500	—	—	—	—	**DH368UWK** ④	**DH368UWK316** ④
Four-Pole—480 Vac—600 Vac, 250 Vdc												
	30	10 ⑤	20 ⑤	25 ⑤	10	20	30	5	—	—	**DH461UWK**	**DH461UWK316**
	60	20 ⑤	40 ⑤	50 ⑤	20	50	60	10	—	—	②	②
	100	40 ⑤	50 ⑤	50 ⑤	40	75	100	20	—	—	②	②
	200	50 ⑤	50 ⑤	50 ⑤	60	125	150	40	—	—	②	②
	400	50 ⑤	—	—	125	250	350	50	—	—	②	②
	600	—	—	—	200	400	500	—	—	—	②	②
	800	—	—	—	—	—	—	—	—	—	②	②

Notes

① DC rating for 800 A switches is 250 V.

② Contact the Safety Switch Flex Center (**1-888-329-9272** or FlexSwitches@eaton.com) for availability of this product.

③ Use three-pole catalog numbers below for 600 Vac, 250 Vdc maximum applications. For 600 Vdc, see note ②.

④ 1200 A/480 V service entrance must include ground fault protection to meet NEC 230.95; see Shunt Trip Safety Switches on **page V2-T1-65**.

⑤ Ratings are for two-phase AC.

Supplied by Digital Stout Innovation & Trading FZE

1

Dimensions

Approximate Dimensions in Inches (mm)

Note: Dimensions are for estimating purposes only.

Heavy-Duty, Non-Fusible, 600 V, Three-Pole, Single-Throw

Ampere Rating	Width (W)	Height (H)	Depth (D)	Depth (D2)	Weight Lbs (kg)
NEMA 1, 3R					
30	8.13 (206.5)	15.88 (403.4)	10.00 (254.0)	5.25 (133.3)	16 (7.264)
60	8.13 (206.5)	15.88 (403.4)	10.00 (254.0)	5.25 (133.3)	16 (7.264)
100	11.13 (282.7)	21.69 (550.9)	10.00 (254.0)	5.25 (133.3)	22 (9.988)
200	16.00 (406.4)	27.66 (702.5)	11.25 (285.5)	6.14 (156.0)	46 (20.884)
400	24.12 (612.6)	44.31 (1125.5)	12.39 (314.7)	7.27 (184.7)	110 (49.94)
600	25.12 (638.0)	51.82 (1316.2)	14.07 (357.4)	8.95 (227.3)	135 (61.29)
800	26.37 (669.8)	55.82 (1417.8)	14.07 (357.4)	8.95 (227.3)	158 (71.732)
1200	43.12 (1095.2)	70.97 (1802.6)	17.12 (434.8)	12.43 (315.7)	430 (195.22)
NEMA 12, 4X Stainless Steel, 4, 4X 316 Stainless Steel					
30	8.76 (222.5)	14.14 (359.2)	10.22 (259.6)	5.50 (139.7)	17 (7.718)
60	8.76 (222.5)	14.14 (359.2)	10.22 (259.6)	5.50 (139.7)	17 (7.718)
100	11.79 (299.5)	24.95 (633.7)	10.22 (259.6)	5.50 (139.7)	28 (12.712)
200	16.95 (430.5)	35.38 (898.7)	11.63 (295.4)	6.44 (163.6)	55 (24.97)
400	24.12 (612.6)	57.47 (1459.7)	12.43 (320.8)	7.19 (182.6)	125 (56.75)
600	25.01 (635.3)	62.97 (1599.4)	12.79 (324.9)	8.95 (227.3)	167 (75.818)
800	26.35 (669.3)	71.72 (1821.7)	12.79 (324.9)	8.95 (227.3)	175 (79.45)
1200	43.11 (1095.0)	73.77 (1873.8)	17.15 (435.6)	12.45 (316.2)	475 (215.65)

Heavy-Duty, Fusible, 240 V and 600 V, Three-Pole Solid Neutral, Single-Throw

Ampere Rating	Width (W)	Height (H)	Depth (D)	Depth (D2)	Weight Lbs (kg)
NEMA 1, 3R					
30	8.13 (206.5)	15.88 (403.4)	10.00 (254.0)	5.25 (133.3)	20 (9.08)
60	8.13 (206.5)	15.88 (403.4)	10.00 (254.0)	5.25 (133.3)	20 (9.08)
100	11.13 (282.7)	21.69 (550.9)	10.00 (254.0)	5.25 (133.3)	27 (12.258)
200	16.00 (406.4)	27.66 (702.5)	11.25 (285.5)	6.14 (156.0)	46 (20.884)
400	24.12 (612.6)	44.31 (1125.5)	12.39 (314.7)	7.27 (184.7)	110 (49.94)
600	25.12 (638.0)	51.82 (1316.2)	14.07 (357.4)	8.95 (227.3)	135 (61.29)
800	26.37 (669.8)	55.82 (1417.8)	14.07 (357.4)	8.95 (227.3)	158 (71.732)
1200	43.12 (1095.2)	70.97 (1802.6)	17.12 (434.8)	12.43 (315.7)	430 (195.22)
NEMA 12, 4X Stainless Steel, 4, 4X 316 Stainless Steel					
30	8.76 (222.5)	19.08 (359.2)	10.22 (259.6)	5.50 (139.7)	22 (9.988)
60	8.76 (222.5)	19.08 (359.2)	10.22 (259.6)	5.50 (139.7)	22 (9.988)
100	11.79 (299.5)	24.95 (633.7)	10.22 (259.6)	5.50 (139.7)	28 (12.712)
200	16.95 (430.5)	35.38 (898.7)	11.63 (295.4)	6.44 (163.6)	55 (24.97)
400	24.12 (612.6)	57.47 (1459.7)	12.43 (320.8)	7.19 (182.6)	125 (56.75)
600	25.01 (635.3)	62.97 (1599.4)	12.79 (324.9)	8.95 (227.3)	167 (75.818)
800	26.35 (669.3)	71.72 (1821.7)	12.79 (324.9)	8.95 (227.3)	175 (79.45)
1200	43.11 (1095.0)	73.77 (1873.8)	17.15 (435.6)	12.45 (316.2)	475 (215.65)

NEMA 1, 3R Heavy-Duty 30–1200 A

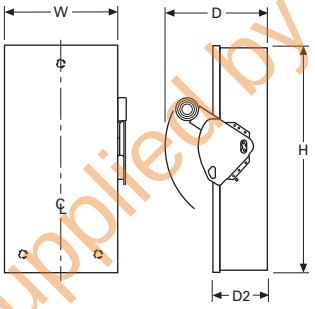

NEMA 4, 4X and 12 Heavy-Duty 30–1200 A

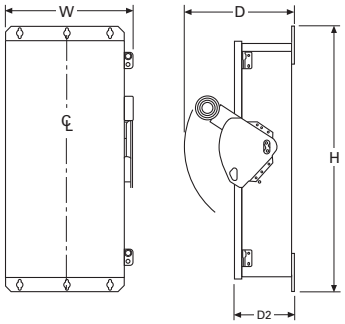

Note: A factory-installed ground lug is supplied in all heavy-duty safety switches.

Supplied by Digital Stout Innovation & Trading FZE

Heavy-Duty Double Door Safety Switch

Contents

Description	*Page*
Product Overview	**V2-T1-2**
General-Duty	**V2-T1-25**
Heavy-Duty	**V2-T1-30**
Heavy-Duty Double Door Safety Switch	
Catalog Number Selection	**V2-T1-40**
Product Selection	**V2-T1-41**
Modifications	**V2-T1-42**
Technical Data and Specifications	**V2-T1-42**
Dimensions	**V2-T1-42**
Six-Pole Switches	
Double-Throw Switches	**V2-T1-46**
EnviroLine Stainless Steel Switch	**V2-T1-53**
Window Switches	**V2-T1-57**
Receptacle Switches	**V2-T1-60**
Non-Metallic KRYDON Switch	**V2-T1-62**
Shunt Trip Safety Switch	**V2-T1-65**
NEMA 7/9—Hazardous Location Disconnect Switch	**V2-T1-68**
Quick-Connect Switches	**V2-T1-70**
Solar Disconnect Switch	**V2-T1-75**
Mill-Duty Rated, Heavy-Duty Safety Switch	**V2-T1-77**
Elevator Control Switch	**V2-T1-79**
Auxiliary Power Heavy-Duty Safety Switch	**V2-T1-82**
Left-Handed Safety Switch	**V2-T1-86**
Heavy-Duty Surge Switch	**V2-T1-87**
OEM Line Isolation (OLI) Switch	**V2-T1-89**
Pringle Bolted Pressure Switch	**V2-T1-92**
Type DS, Fusible and Non-Fusible	**V2-T1-95**
Type Visi-Flex DE-ION	**V2-T1-98**
Flange Mounted—Variable Depth	**V2-T1-102**
Flange Mounted—Fixed Depth	**V2-T1-106**

Heavy-Duty Double Door Safety Switch

Product Description

Eaton's double-door safety switch is the industry's first compartmentalized fusible safety switch. The revolutionary two-door design includes an internal barrier that separates the upper switching compartment from the lower fuse compartment. This allows operators to access the fuse compartment with no exposure to line-side power, providing enhanced safety during fuse replacement.

Features

- 30–1200 A
- NEMA 12/3R and NEMA 4X stainless enclosures
- External viewing window over switching blade standard
- Enhanced visible blades included
- Interlocking mechanism keeps door closed when the switch is ON
- Optional voltage monitors

Standards and Certifications

- UL 98 Standard, file no. E5239

UL Listed

Supplied by Digital Stout Innovation & Trading FZE

1

Catalog Number Selection

Heavy-Duty Double Door Safety Switch

DD 3 6 3 F D K W - 00LO

Switch Type
DD = Heavy-duty isolation switch

Poles/Blades
2 = Two-pole
3 = Three-pole
4 = Four-pole

Voltage
2 = 240 Vac
6 = 600 Vac

Ampere Rating

1 = 30 A	**5** = 400 A
2 = 60 A	**6** = 600 A
3 = 100 A	**7** = 800 A
4 = 200 A	**8** = 1200 A

Fusible/Non-Fusible or Neutral
F = Fusible without neutral
N = Fusible with neutral
SN = Fusible with switched neutral

NEMA Enclosure
D = NEMA 12/3R
W = NEMA 4X Stainless

Series
K = Switch

Options
W = Upper viewing window

Options/Modifications
00V1 = Voltage indicator line side
00V2 = Voltage indicator load side
00V3 = Voltage indicator line and load side
BLAK = Painted black
WHIT = Painted white
0RED = Painted red
0316 = 316 stainless steel
00NP = Custom nameplate
00TK = Trapped key (Kirk®, superior)
00LW = Lower viewing window
00CP = Control pole (same make/same break)
0CP2 = Control pole (late make/early break)
0002 = 1NO/1NC auxiliary contact
0003 = NO/2NC auxiliary contact
00LO = Lock on

Supplied by Digital Stout Innovation & Trading FZE

Product Selection

DD321FDKW

240 Vac Heavy-Duty Double Door, Fusible—NEMA 12/3R, 4X

System	Ampere Rating	Fuse Type Provision	Maximum hp Ratings with Time Delay Fuses Single-Phase AC 480 V	Single-Phase AC 600 V	Three-Phase AC 480 V	Three-Phase AC 600 V	DC 250 V	DC 600 V	NEMA 12/3R Enclosure Dust-tight Catalog Number	NEMA 4X Enclosure Watertight Catalog Number
Three-Pole, 240 Vac, 250 Vdc (Suitable for Service Entrance Use with a Neutral Kit Installed)										
	30	H or R	7.5	10	15	20	—	—	**DD321FDKW**	**DD321FWKW**
	60	H or R	20	25	30	50	—	—	**DD322FDKW**	**DD322FWKW**
	100	H or R	30	40	60	75	—	—	**DD323FDKW**	**DD323FWKW**
	200	H or R	50	50	125	150	—	—	**DD324FDKW**	**DD324FWKW**
	400	H or R	—	—	250	350	—	—	**DD325FDKW**	**DD325FWKW**
	600	H or R	—	—	400	500	—	—	**DD326FDKW**	**DD326FWKW**
	800	L	—	—	500	500	—	—	**DD327FDKW**	**DD327FWKW**
	1200	L	—	—	500	500	—	—	**DD328FDKW**	**DD328NWKW**
Four-Wire (Three Blades, Three Fuses, S/N) 240 Vac, 250 Vdc										
	30	H or R	7.5	10	15	20	—	—	**DD321NDKW**	**DD321NWKW**
	60	H or R	20	25	30	50	—	—	**DD322NDKW**	**DD322NWKW**
	100	H or R	30	40	60	75	—	—	**DD323NDKW**	**DD323NWKW**
	200	H or R	50	50	125	150	—	—	**DD324NDKW**	**DD324NWKW**
	400	H or R	—	—	250	350	—	—	**DD325NDKW**	**DD325NWKW**
	600	H or R	—	—	400	500	—	—	**DD326NDKW**	**DD326NWKW**
	800	L	—	—	500	500	—	—	**DD327NDKW**	**DD327NWKW**
	1200	L	—	—	500	500	—	—	**DD328NDKW**	**DD328NWKW**

DD361FDKW

600 Vac Heavy-Duty Double Door, Fusible—NEMA 12/3R, 4X

System	Ampere Rating	Fuse Type Provision	Maximum hp Ratings with Time Delay Fuses Single-Phase AC 480 V	Single-Phase AC 600 V	Three-Phase AC 480 V	Three-Phase AC 600 V	DC 250 V	DC 600 V	NEMA 12/3R Enclosure Dust-tight Catalog Number	NEMA 4X Enclosure Watertight Catalog Number
Three-Pole, 480 Vac–600 Vac or Vdc (Suitable for Service Entrance Use with a Neutral Kit Installed)										
	30	H or R	7.5	10	15	20	—	—	**DD361FDKW**	**DD361FWKW**
	60	H or R	20	25	30	50	—	—	**DD362FDKW**	**DD362FWKW**
	100	H or R	30	40	60	75	—	—	**DD363FDKW**	**DD363FWKW**
	200	H or R	50	50	125	150	—	—	**DD364FDKW**	**DD364FWKW**
	400	H or R	—	—	250	350	—	—	**DD365FDKW**	**DD365FWKW**
	600	H or R	—	—	400	500	—	—	**DD366FDKW**	**DD366FWKW**
	800	L	—	—	500	500	—	—	**DD367FDKW**	**DD367FWKW**
	1200	L	—	—	500	500	—	—	**DD368FDKW** ①	**DD368NWKW** ①
Four-Wire (Three Blades, Three Fuses, S/N) 480 Vac–600 Vac, 250 Vdc										
	30	H or R	7.5	10	15	20	—	—	**DD361NDKW**	**DD361NWKW**
	60	H or R	20	25	30	50	—	—	**DD362NDKW**	**DD362NWKW**
	100	H or R	30	40	60	75	—	—	**DD363NDKW**	**DD363NWKW**
	200	H or R	50	50	125	150	—	—	**DD364NDKW**	**DD364NWKW**
	400	H or R	—	—	250	350	—	—	**DD365NDKW**	**DD365NWKW**
	600	H or R	—	—	400	500	—	—	**DD366NDKW**	**DD366NWKW**
	800	L	—	—	500	500	—	—	**DD367NDKW**	**DD367NWKW**
	1200	L	—	—	500	500	—	—	**DD368NDKW** ①	**DD368NWKW** ①

Note

① 1200 A is not service entrance rated at 600 V.

Supplied by Digital Stout Innovation & Trading FZE

1

Modifications

Additions are available such as custom paint, 316-stainless enclosures, custom OEM labeling and more.

Call the Flex Center at 1-888-329-9272 or FlexSwitches@Eaton.com for more information.

Technical Data and Specifications

Ratings and Capacities

Ampere Rating	Factory Fuse Class	Optional Fuse Class ①	Standard Lug Capacities Per Phase Min. Wire Size	Max. Wire Size	Ground ② Min. Wire Size	Max. Wire Size
30	H or R	J, R	#14	#2	#14	#4
60	H or R	J, R	#14	#2	#14	#4
100	H or R	J, R	#14	1/0	#14	#4
200	H or R	J, R, T	#6	300 kcmil	#14	#2
400	H or R	J, R, T	(2) 1/0 (1) 1/0	(2) 300 kcmil–1/0 or ③ (1) 175 kcmil–1/0	#6	250 kcmil
600	H or R	J, R, T	(1) #2 (1) #2	(1) 600 kcmil and ④ (1) 750 kcmil	#6	250 kcmil
800	L	T	(4) 1/0	(4) 750 kcmil	#6	250 kcmil
1200	L	T	(4) 1/0	(4) 750 kcmil	#6	250 kcmil

Cable IN/OUT Reference Chart

	Top IN ⑤	Bottom IN
Top OUT	■	—
Bottom OUT	■	■

Dimensions

Approximate Dimensions in Inches (mm)

Note: Dimensions are for estimating purposes only.

Heavy-Duty Double Door Safety Switch

Ampere Rating	Height (H)	Width (W)	Depth (D1)	Depth (D2)
30/60	37.49 (952.3)	9.30 (236.2)	8.22 (208.8)	6.37 (161.8)
100	39.19 (995.4)	12.33 (313.2)	10.21 (259.3)	6.37 (161.8)
200	49.90 (1267.5)	17.18 (436.4)	11.62 (295.1)	7.31 (185.7)
400	72.46 (1840.5)	24.32 (617.7)	16.41 (416.8)	14.56 (369.8)
600	77.96 (1980.2)	25.32 (643.1)	19.31 (490.5)	17.80 (452.1)
800	86.73 (2202.9)	26.57 (674.9)	22.16 (562.9)	17.81 (452.4)
1200	91.02 (2312.0)	43.11 (1095.0)	27.18 (690.4)	21.23 (539.2)

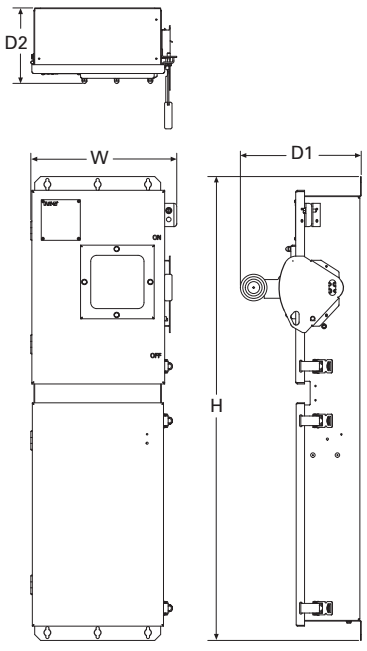

Notes

① Switches ranging from 30 A to 400 A can relocate clips/base for class J fuses. Class R fuse kit rejects all other size fuses except class R. All other classes/amperages require a kit. Please consult catalog or contact the Technical Resource Center (TRC) for specific kit catalog numbers.

② Lay-in type lug uses 30–100 A. Two ground lugs are provided for 200–1200 A switches, each accommodating the wire range listed above.

③ Single barrel lug that accepts one or two cables per phase as detailed above.

④ Double barrel lug that accepts two cables per phase as detailed above.

⑤ Remove wireway in bottom compartment. Necessary for 30–200 A units only.

Supplied by Digital Stout Innovation & Trading FZE

Six-Pole Motor Circuit

Contents

Description	*Page*
Product Overview	**V2-T1-2**
General-Duty	**V2-T1-25**
Heavy-Duty	**V2-T1-30**
Heavy-Duty Double Door Safety Switch	**V2-T1-39**
Six-Pole Switches	
Product Selection	**V2-T1-44**
Dimensions	**V2-T1-45**
Double-Throw Switches	**V2-T1-46**
EnviroLine Stainless Steel Switch	**V2-T1-53**
Window Switches	**V2-T1-57**
Receptacle Switches	**V2-T1-60**
Non-Metallic KRYDON Switch	**V2-T1-62**
Shunt Trip Safety Switch	**V2-T1-65**
NEMA 7/9—Hazardous Location Disconnect Switch	**V2-T1-68**
Quick-Connect Switches	**V2-T1-70**
Solar Disconnect Switch	**V2-T1-75**
Mill-Duty Rated, Heavy-Duty Safety Switch	**V2-T1-77**
Elevator Control Switch	**V2-T1-79**
Auxiliary Power Heavy-Duty Safety Switch	**V2-T1-82**
Left-Handed Safety Switch	**V2-T1-86**
Heavy-Duty Surge Switch	**V2-T1-87**
OEM Line Isolation (OLI) Switch	**V2-T1-89**
Pringle Bolted Pressure Switch	**V2-T1-92**
Type DS, Fusible and Non-Fusible	**V2-T1-95**
Type Visi-Flex DE-ION	**V2-T1-98**
Flange Mounted—Variable Depth	**V2-T1-102**
Flange Mounted—Fixed Depth	**V2-T1-106**

Six-Pole Switches

Product Description

- 600 Vac, 250 Vdc maximum
- 30–200 A UL listed
- 400–800 A available, non-UL listed
- Fusible or non-fusible

Application Description

A compact safety switch is ideal for use in heavy industry and for when an "in sight" disconnecting means is required for two-speed motors that are remote from their motor control devices.

Features, Benefits and Functions

- Trunk-type latches keep the cover tightly closed and a neoprene gasket seals out moisture and dust from the switch assembly
- Visible double-break quick-make, quick-break rotary blade mechanism. Two points of contact provide a positive open and close, easier operation, and also help prevent contact burning for longer contact life
- Clear line shield protection
- Built-in fuse pullers
- Clearly visible handle
- Triple padlocking capability; cabinet door can be further padlocked at the top and bottom
- Deionizing arc chutes; arc chutes confine and suppress the arcs produced by opening contacts under load
- For factory modifications, refer to **Page V2-T1-15**

Standards and Certifications

- UL listed File No. E5239
- UL 98
- NEMA Std KS-1

Listed

Seismic Qualifications

- Heavy-duty switches exceed the requirements of Uniform Building Code (UBC) and California Code Title 24 OSP-0011-10, OSP-0012-10

Supplied by Digital Stout Innovation & Trading FZE

1

Product Selection

600 Vac Heavy-Duty, Fusible, Six-Pole, Single-Throw

System	Ampere Rating	Fuse Class	Maximum Horsepower Ratings, Three-Phase AC (Higher Rating with Time Delay Fuses) 240 V	480 V	600 V	NEMA 12/3R Enclosure Industrial, Dust-Tight Catalog Number	NEMA 4X Enclosure Corrosion-Resistant, Stainless Steel Catalog Number
600 Vac with Fuse Clips—250 Vdc							
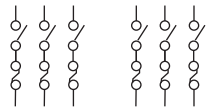	30	H or R	3–7-1/2	5–15	7-1/2–20	**DH661FDK** ①②	**DH661FWK** ②
	60	H or R	7-1/2–15	15–30	15–50	**DH662FDK** ①	**DH662FWK**
	100	H or R	15–30	25–60	30–75	**DH663FDK** ①	**DH663FWK**
	200	H or R	25–60	50–125	60–150	**DH664FDK** ①	**DH664FWK**
	400	H or R	—	—	—	**DH665FDK** ③	**DH665FWK** ③
	600	H or R	—	—	—	**DH666FDK** ③	④
	800	L	—	—	—	④	④

DH661UDK

600 Vac Heavy-Duty, Non-Fusible, Six-Pole, Single-Throw

System	Ampere Rating	Maximum Horsepower Ratings Three-Phase AC 240 V	480 V	600 V	Three-Phase DC 250 V	600 V ⑤	NEMA 12/3R Enclosure Industrial, Dust-Tight Catalog Number	NEMA 4X Enclosure Corrosion-Resistant, Stainless Steel Catalog Number
600 Vac—250 Vdc								
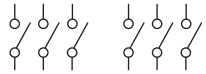	30	10	20	30	5	15	**DH661UDK** ①	**DH661UWK**
	60	20	50	60	10	25	**DH662UDK** ①	**DH662UWK**
	100	40	75	100	20	25	**DH663UDK** ①	**DH663UWK**
	200	60	125	150	40	50	**DH664UDK** ①	**DH664UWK**
	400	—	—	—	—	—	**DH665UDK** ③	**DH665UWK** ③
	600	—	—	—	—	—	**DH666UDK** ③	**DH666UWK** ③
	800	—	—	—	—	—	④	④

Notes

① NEMA 12 enclosures (30–800 A) can be field modified to meet NEMA 3R rainproof requirements when a factory provided drain hole is opened.
② 30 A heavy-duty switches with Type J fuse provisions are available from the factory only.
③ Non-UL catalog numbers.
④ Contact the Safety Switch Flex Center (**1-888-329-9272** or FlexSwitches@eaton.com) for availability of this product.
⑤ 600 Vdc rating requires that the switch be wired per the wiring diagram on the device publication.

Supplied by Digital Stout Innovation & Trading FZE

Dimensions

Approximate Dimensions in Inches (mm)

Note: Dimensions are for estimating purposes only.

600 Vac Heavy-Duty, Six-Pole, Single-Throw

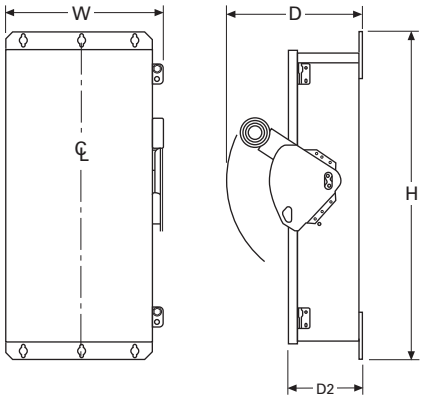

Note: A factory-installed ground lug is supplied in all heavy-duty safety switches.

Six-Pole Switches, Fusible and Non-Fusible

Amperage	NEMA Rating	Height (H)	Width (W)	Depth (D)	Depth (D2)	Weight Lbs (kg)
30A	NEMA 12/3R and 4X	12.17 (309.2)	19.08 (484.6)	10.22 (259.6)	5.50 (139.7)	40 (18.1)
60A	NEMA 12/3R and 4X	12.17 (309.2)	19.08 (484.6)	10.22 (259.6)	5.50 (139.7)	40 (18.1)
100A	NEMA 12/3R and 4X	15.42 (391.7)	24.95 (633.7)	10.22 (259.6)	5.50 (139.7)	45 (20.4)
200A	NEMA 12/3R and 4X	23.51 (597.2)	35.38 (898.7)	11.63 (295.4)	6.44 (163.6)	65 (29.5)

Supplied by Digital Stout Innovation & Trading FZE

1

Heavy-Duty Double-Throw

Contents

Description	Page
Product Overview	V2-T1-2
General-Duty	V2-T1-25
Heavy-Duty	V2-T1-30
Heavy-Duty Double Door Safety Switch	V2-T1-39
Six-Pole Switches	V2-T1-43
Double-Throw Switches	
Features, Benefits and Functions	V2-T1-46
Standards and Certifications	V2-T1-47
Product Selection	V2-T1-47
Technical Data and Specifications	V2-T1-51
Dimensions	V2-T1-51
EnviroLine Stainless Steel Switch	V2-T1-53
Window Switches	V2-T1-57
Receptacle Switches	V2-T1-60
Non-Metallic KRYDON Switch	V2-T1-62
Shunt Trip Safety Switch	V2-T1-65
NEMA 7/9—Hazardous Location Disconnect Switch	V2-T1-68
Quick-Connect Switches	V2-T1-70
Solar Disconnect Switch	V2-T1-75
Mill-Duty Rated, Heavy-Duty Safety Switch	V2-T1-77
Elevator Control Switch	V2-T1-79
Auxiliary Power Heavy-Duty Safety Switch	V2-T1-82
Left-Handed Safety Switch	V2-T1-86
Heavy-Duty Surge Switch	V2-T1-87
OEM Line Isolation (OLI) Switch	V2-T1-89
Pringle Bolted Pressure Switch	V2-T1-92
Type DS, Fusible and Non-Fusible	V2-T1-95
Type Visi-Flex DE-ION	V2-T1-98
Flange Mounted—Variable Depth	V2-T1-102
Flange Mounted—Fixed Depth	V2-T1-106

Double-Throw Switches

Product Description

Double-throw switches are used to transfer service from a normal power source to an alternate source, or to switch from one load circuit to another.

- 30–1200 A
- Horsepower rated
- 600 Vac, 250 Vdc maximum
- 600–1200 A fusible utilize common set of fuses as Eaton's stacked double-throw design. The stacked design is suitable for two source 1 load applications only
- 600–800 A fusible are available for one source 2 load applications; include an "R" at the end of the catalog number
- Fusible or non-fusible
- Fusible and non-fusible switches are 100% load break and 100% load make rated
- Suitable for service entrance applications unless otherwise noted
- The continuous load current of fusible switches is not to exceed 80% of the rating of fuses employed in other than motor circuits. Non-fusible switches are 100% fully rated
- Wiring configuration from factory allows a single load to be supplied by a normal or alternate source. 30–800 A can be field modified to allow two loads to be alternately supplied by a single power source, except for stacked design double-throw switches

Features, Benefits and Functions

- Ample wire bending space provides for easier installation
- Visible double-break quick-make, quick-break rotary blade mechanism. Two points of contact provide a positive open and close, easier operation, and also help prevent contact burning for longer contact life
- Triple padlocking capability. Personnel safety feature since the large hasp can accommodate up to three 3/8-inch (9.5 mm) shank locks. Clearly visible handle. The position (ON or OFF) can be clearly seen from a distance
- Deionizing arc chutes; arc chutes confine and suppress the arcs produced by opening contacts under load
- Additional locking capability; cabinet door can be further padlocked at the top and bottom
- Clear line shield (provided on fusible double-throw) protects against accidental contact with energized parts. Probe holes enable the user to test if the line side is energized without removing the shield
- Tangential knockouts on sides, top and bottom. Enables any size of conduit to be mounted close to the wall, providing for cable installation closer to the wall and a neat appearance

Supplied by Digital Stout Innovation & Trading FZE

Standards and Certifications

- UL listed switching neutral capability is available on three-pole and four-pole non-fusible double-throw switches with the installation of the proper bonding kit shown on **Page V2-T1-13**
- Suitable for use as a manually operated switch per 2005 NEC Article 702
- UL listed File No. E5239
- UL 98
- NEMA Std KS-1

Listed

Seismic Qualifications

- Heavy-duty switches exceed the requirements of Uniform Building Code (UBC) and California Code Title 24 OSP-0011-10, OSP-0012-10

Product Selection

DT223URH-N
Compact Design

240 Vac General-Duty, Non-Fusible, Compact Design, Double-Throw

Ampere Rating Main and Standby	NEMA 3R Enclosure Rainproof Catalog Number	Ampere Rating Main and Standby	NEMA 3R Enclosure Rainproof Catalog Number
Two-Pole—240 Vac		**Two-Pole, Three-Wire—240 Vac—Solid Neutral**	
30	**DT221URH**	30	**DT221URH-N**
60	**DT222URH**	60	**DT222URH-N**
100	**DT223URH**	100	**DT223URH-N**

DT224URK-NPS

240 Vac General-Duty, Non-Fusible, Compact Design, Double-Throw

Ampere Rating Main and Standby	Maximum Horsepower Ratings Single-Phase AC 240 V	480 V	600 V	Three-Phase AC 240 V	480 V	600 V	DC 250 V	NEMA 3R Enclosure Rainproof Catalog Number
Two-Pole—240 Vac—250 Vdc								
30	3	—	—	—	—	—	5	**DT221URKPS**
60	1	—	—	—	—	—	10	**DT222URKPS**
100	20	—	—	—	—	—	20	**DT223URKPS**
200	15	—	—	—	—	—	40	**DT224URKPS**
400	—	—	—	—	—	—	50	**DT225URKPS**
Two-Pole, Three-Wire—240 Vac—250 Vdc, Solid Neutral								
30	3	—	—	—	—	—	5	**DT221URK-NPS**
60	10	—	—	—	—	—	10	**DT222URK-NPS**
100	20	—	—	—	—	—	20	**DT223URK-NPS**
200	15	—	—	—	—	—	40	**DT224URK-NPS**
400	—	—	—	—	—	—	50	**DT225URK-NPS**

Supplied by Digital Stout Innovation & Trading FZE

1

240 Vac Heavy-Duty, Fusible, Double-Throw

Ampere Rating Main and Standby	Fuse Class Provision	Maximum Horsepower Ratings with Time Delay Fuses Single-Phase AC 240 V	480 V	600 V	Three-Phase AC 240 V	480 V	600 V	DC 250 V	NEMA 1 Enclosure Indoor Catalog Number	NEMA 3R Enclosure Rainproof Catalog Number	NEMA 12 Enclosure Industrial, Dust-Tight Catalog Number	NEMA 4X Enclosure Corrosion-Resistant Stainless-Steel Catalog Number
Two-Pole—240 Vac—250 Vdc												
200	H or R	15	—	—	—	—	—	40	**DT224FGK**	**DT224FRK**	—	—
Three-Pole—240 Vac—250 Vdc												
30	H or R	3	—	—	7-1/2	—	—	5	**DT321FGK**	**DT321FRK**	—	**DT321FWK**
60	H or R	10	—	—	15	—	—	10	**DT322FGK**	**DT322FRK**	—	**DT322FWK**
100	H or R	15	—	—	30	—	—	20	**DT323FGK**	**DT323FRK**	—	**DT323FWK**
200	H or R	15	—	—	60	—	—	40	**DT324FGK**	**DT324FRK**	—	**DT324FWK**
400	H or R	—	—	—	125	—	—	50	**DT325FGK**	**DT325FRK**	—	**DT325FWK**
600	J	—	—	—	50	—	—	50	**DT326FGK** ①	**DT326FRK** ①	—	—
800	L	—	—	—	—	—	—	—	**DT327FGK** ①	**DT327FRK** ①	—	—
1200	L	—	—	—	—	—	—	—	**DT328FGK**	**DT328FRK**	—	—

Note

① Available as one source 2 load application by adding "R" to the end of the catalog number.

UL listed switching neutral capability is available on three-pole and four-pole non-fusible double-throw switches with the installation of the proper bonding kit shown on **Page V2-T1-13**. See **Page V2-T1-15** for factory installation from the Flex Center.

Supplied by Digital Stout Innovation & Trading FZE

DT363FGK

600 Vac Heavy-Duty, Fusible, Double-Throw

Ampere Rating Main and Standby	Fuse Class Provision	Maximum Horsepower Ratings with Time Delay Fuses Single-Phase AC 480 V	Single-Phase AC 600 V	Three-Phase AC 480 V	Three-Phase AC 600 V	DC 250 V	NEMA 1 Enclosure Indoor Catalog Number	NEMA 3R Enclosure Rainproof Catalog Number	NEMA 12 Enclosure Industrial, Dust-Tight Catalog Number	NEMA 4X Enclosure Corrosion-Resistant, Stainless Steel Catalog Number
Three-Pole—600 Vac—250 Vdc										
30	H or R	7-1/2	10	15	20	—	**DT361FGK**	②	②	**DT361FWK**
60	H or R	20	25	30	50	—	**DT362FGK**	②	②	**DT362FWK**
100	H or R	30	40	60	75	—	**DT363FGK**	**DT363FRK**	②	**DT363FWK**
200	H or R	50	50	125	150	40	**DT364FGK**	**DT364FRK**	②	**DT364FWK**
400	T	—	—	250	350	50	**DT365FGK**	**DT365FRK**	—	**DT365FWK**
600	J	—	—	—	—	—	**DT366FGK** ①	**DT366FRK** ①	—	—
800	L	—	—	—	—	—	**DT367FGK** ①	**DT367FRK** ①	—	—
1200	L	—	—	—	—	—	**DT368FGK**	**DT368FRK**	—	—

DT363URK

600 Vac Heavy-Duty, Non-Fusible, Double-Throw

Ampere Rating Main and Standby	Maximum Horsepower Ratings Single-Phase AC 480 V	Single-Phase AC 600 V	Three-Phase AC 480 V	Three-Phase AC 600 V	DC 250 V	NEMA 1 Enclosure Indoor Catalog Number	NEMA 3R Enclosure Rainproof Catalog Number	NEMA 12 Enclosure Industrial, Dust-Tight Catalog Number	NEMA 4X Enclosure Corrosion-Resistant, Stainless Steel Catalog Number
Two-Pole—600 Vac—250 Vdc									
30	7-1/2	10	—	—	5	**DT261UGK**	②	—	—
60	20	25	—	—	10	**DT262UGK**	②	—	—
100	40	50	—	—	20	**DT263UGK**	②	—	—
200	50	50	—	—	40	**DT264UGK** ③	**DT264URK** ③	—	—
400	—	—	—	—	50	**DT265UGK**	**DT265URK**	—	—
600	—	—	—	—	50	**DT266UGK**	**DT266URK**	—	—
800	—	—	—	—	50	**DT267UGK**	**DT267URK**	—	—
1200	—	—	—	—	50	**DT268UGK**	**DT268URK**	—	—
Three-Pole—600 Vac—250 Vdc									
30	7-1/2	10	20	30	5	**DT361UGK**	**DT361URK**	**DT361UDK** ④	**DT361UWK**
60	20	25	50	60	10	**DT362UGK**	**DT362URK**	**DT362UDK** ④	**DT362UWK**
100	40	50	75	100	20	**DT363UGK**	**DT363URK**	**DT363UDK** ④	**DT363UWK**
200	50	50	125	150	40	**DT364UGK**	**DT364URK**	**DT364UDK** ④	**DT364UWK**
400	—	—	250	350	50	**DT365UGK**	**DT365URK**	**DT365UDK** ④	**DT365UWK**
600	—	—	250	350	50	**DT366UGK**	**DT366URK**	②④	②
800	—	—	250	350	50	**DT367UGK**	**DT367URK**	—	—
1200	—	—	250	350	50	**DT368UGK**	**DT368URK**	—	—

Notes

① Available as one source 2 load application by adding "R" to the end of the catalog number.

② Contact the Safety Switch Flex Center (**1-888-329-9272** or FlexSwitches@eaton.com) for availability of this product.

③ Rated 600 Vdc, 50 hp in addition to ratings shown in table.

④ NEMA 12 enclosures (30–1200 A) can be field modified to meet NEMA 3R rainproof requirements when a factory provided drain hole is opened.

UL listed switching neutral capability is available on three-pole and four-pole non-fusible double-throw switches with the installation of the proper bonding kit shown on **Page V2-T1-13**. See **Page V2-T1-15** for factory installation from the Flex Center.

Supplied by Digital Stout Innovation & Trading FZE

1

DT363URK

600 Vac Heavy-Duty, Non-Fusible, Double-Throw

Ampere Rating Main and Standby	Maximum Horsepower Ratings Single-Phase AC 480 V	Single-Phase AC 600 V	Three-Phase AC 480 V	Three-Phase AC 600 V	DC 250 V	NEMA 1 Enclosure Indoor Catalog Number	NEMA 3R Enclosure Rainproof Catalog Number	NEMA 12 Enclosure Industrial, Dust-Tight Catalog Number	NEMA 4X Enclosure Corrosion-Resistant, Stainless Steel Catalog Number
Four-Pole—600 Vac—250 Vdc ①									
30	7-1/2	10	20	30	5	②	**DT461URK**	②	②
60	20	25	50	60	10	②	**DT462URK**	②	②
100	40	50	75	100	20	②	**DT463URK**	②	②
200	—	50	125	150	40	**DT464UGK**	**DT464URK**	②	②
400	—	—	250	350	50	**DT465UGK**	**DT465URK**	②	②
600	—	—	250	350	50	**DT466UGK**	**DT466URK**	②	②
800	—	—	250	350	50	**DT467UGK**	**DT467URK**	②	②
Six-Pole—600 Vac—250 Vdc ①									
30	7-1/2	10	15	30	5	②	**DT661URK**	②	②
60	20	25	50	60	10	②	**DT662URK**	②	②
100	40	50	75	100	20	②	**DT663URK**	②	②

Notes

① **Field installable neutral kit is not available. If a neutral is required, order the catalog number shown in the table with "N" suffix.**

② Contact the Safety Switch Flex Center (**1-888-329-9272** or FlexSwitches@eaton.com) for availability of this product.

UL listed switching neutral capability is available on three-pole and four-pole non-fusible double-throw switches with the installation of the proper bonding kit shown on **Page V2-T1-13**. See **Page V2-T1-15** for factory installation from the Flex Center.

Supplied by Digital Stout Innovation & Trading FZE

Technical Data and Specifications

Typical Fusible, Double-Throw Schematic Diagram

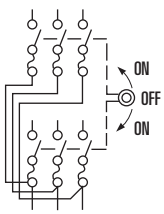

Fusible Three-Pole Two Sources

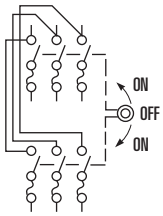

Fusible Three-Pole Two Loads

Typical Non-Fusible, Double-Throw Schematic Diagram

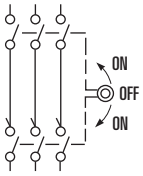

Non-Fusible Three-Pole Two Sources or Two Loads

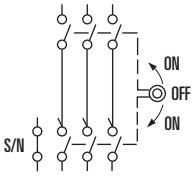

Non-Fusible Three-Pole Two Sources or Two Loads

Typical General-Duty, Double-Throw Schematic Diagrams (with and without factory-installed neutral)

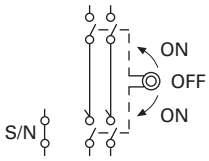

Two Sources

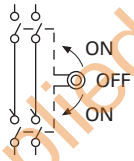

Short-Circuit Ratings Using Class "R", "J", "L" or "T" Fusing Where Applicable

Ampere Rating	Voltage Ratings Type 1	Type 3R	Type 12	Type 4 and 4X
30	100k at 600	100k at 600	100k at 600	100k at 600
60	100k at 600	100k at 600	100k at 600	100k at 600
100	100k at 600	100k at 600	100k at 600	100k at 600
200	100k at 600	100k at 600	100k at 600	100k at 600
400	100k at 600	100k at 600	100k at 600	100k at 600
600	100k at 600	100k at 600	100k at 600	100k at 600
800	100k at 600	100k at 600	—	—
1200	100k at 600	100k at 600	—	—

Dimensions

Approximate Dimensions in Inches (mm)

General-Duty, Non-Fusible, 240 V, Two-Pole Solid Neutral, Double-Throw, Compact Design

Ampere Rating	Height (H)	Width (W)	Depth (D)	Depth (D2)	Weight Lbs (kg)
NEMA 3R					
30	14.69 (373.1)	9.63 (244.6)	10.81 (274.6)	5.23 (132.8)	12 (5.5)
60	14.69 (373.1)	9.63 (244.6)	10.81 (274.6)	5.23 (132.8)	12 (5.5)
100	14.69 (373.1)	9.63 (244.6)	10.81 (274.6)	5.23 (132.8)	12 (5.5)

General-Duty, Non-Fusible, 240 V, Two-Pole Solid Neutral, Double-Throw, Quick-Make, Quick-Break Design

Ampere Rating	Height (H)	Width (W)	Depth (D)	Depth (D2)	Weight Lbs (kg)
NEMA 3R					
30	24.63 (625.6)	11.94 (303.3)	9.88 (251.0)	5.38 (136.7)	34 (15.4)
60	24.63 (625.6)	11.94 (303.3)	9.88 (251.0)	5.38 (136.7)	34 (15.4
100	24.63 (625.6)	11.94 (303.3)	9.88 (251.0)	5.38 (136.7)	34 (15.4)
200	37.38 (949.5)	19.56 (496.8)	11.25 (285.8)	6.10 (154.9)	80 (36.3)
400	53.81 (1366.8)	23.13 (587.5)	12.50 (317.6)	8.88 (225.6)	140 (63.6)

NEMA 3R, 30–400 A, General-Duty, Non-Fusible, Double-Throw

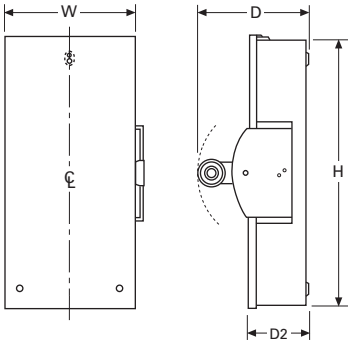

Notes

Class "H" fuse clips supplied as standard for 30–400 A except Class "T" for 400 A at 600 V. Rated at 10,000 rms symmetrical when using Class "H" fuses.

Table is not applicable to the compact design shown on **Page V2-T1-47**. The compact design is suitable for use on a circuit capable of delivering not more than 10,000 rms symmetrical amperes.

Class "R" fuse adapter kits are shown on **Page V2-T1-13**. Individual adapter kits are applicable as shown on **Page V2-T1-13** and yield the short-circuit ratings per the tables above when Class "R" fuses are installed. When installed, Class "R" fuse adapter kits reject all fuses except Class "R."

Class "J" fuse provisions can be obtained on most 60–400 A safety switches by moving the fuse base to a new position as instructed by the device publication label. Class "J" fuse adapter kits, where needed, are shown on **Page V2-T1-13** and yield the short-circuit ratings per the tables above when Class "J" fuses are installed. Class "J" fuse provisions must be factory installed on 30 A heavy-duty switches. Catalog numbers are shown in table on **Page V2-T1-15**. Class "J" fusing is not applicable on 30–200 A general-duty switches, 30–100 A double-throw switches, and any switch higher than 600 A.

Class "T" fuse adapter kits are shown on **Page V2-T1-13**. Individual adapter kits are applicable to 200–800 A switches as shown on **Page V2-T1-13** and yield the short-circuit ratings per the tables to the left when Class "T" fuses are installed. On 1200 A switches, Class "T" fuse provisions can be obtained by moving the fuse base to a new position as instructed by the device publication label.

Supplied by Digital Stout Innovation & Trading FZE

1

Approximate Dimensions in Inches (mm)

Heavy-Duty, Non-Fusible, 240 V and 600 V, Three-Pole, Double-Throw

Ampere Rating	Width (W)	Height (H)	Depth (D)	Depth (D2)	Weight Lbs (kg)
NEMA 1, 3R					
30	11.94 (303.3)	24.63 (625.6)	9.88 (251.0)	5.38 (136.7)	34 (15.436)
60	11.94 (303.3)	24.63 (625.6)	9.88 (251.0)	5.38 (136.7)	34 (15.436)
100	11.94 (303.3)	24.63 (625.6)	9.88 (251.0)	5.38 (136.7)	34 (15.436)
200	19.56 (496.8)	37.38 (949.5)	11.25 (285.8)	6.10 (154.9)	80 (36.32)
400	23.13 (587.5)	53.81 (1366.8)	12.50 (317.5)	7.25 (184.2)	140 (63.56)
600	27.44 (697.0)	63.31 (1608.1)	14.13 (358.9)	8.88 (225.6)	175 (79.45)
800	27.44 (697.0)	63.31 (1608.1)	14.13 (358.9)	8.88 (225.6)	175 (79.45)
1200	42.62 (1082.5)	78.11 (1984.0)	29.62 (752.3)	20.47 (519.9)	473 (214.6)
NEMA 12, 4X Stainless Steel					
30	12.00 (304.8)	25.88 (657.4)	10.25 (260.4)	5.50 (139.7)	60 (27.24)
60	12.00 (304.8)	25.88 (657.4)	10.25 (260.4)	5.50 (139.7)	60 (27.24)
100	12.00 (304.8)	25.88 (657.4)	10.25 (260.4)	5.50 (139.7)	60 (27.24)
200	19.50 (495.3)	41.00 (1041.4)	11.63 (295.4)	6.48 (164.6)	105 (47.67)
400	23.00 (584.2)	57.50 (1460.5)	12.50 (317.5)	7.25 (184.2)	185 (83.99)

Heavy-Duty, Fusible, 240 V and 600 V, Three-Pole, Double-Throw

Ampere Rating	Width (W)	Height (H)	Depth (D)	Depth (D2)	Weight Lbs (kg)
NEMA 1, 3R					
30	11.94 (303.3)	36.63 (930.4)	9.88 (251.0)	5.38 (136.7)	44 (19.976)
60	11.94 (303.3)	36.63 (930.4)	9.88 (251.0)	5.38 (136.7)	44 (19.976)
100	11.94 (303.3)	36.63 (930.4)	9.88 (251.0)	5.38 (136.7)	44 (19.976)
200	19.56 (496.8)	50.88 (1292.4)	11.25 (285.8)	6.10 (154.9)	95 (43.13)
400	25.38 (644.7)	74.75 (1898.7)	14.13 (358.9)	8.88 (225.6)	230 (104.42)
600	28.12 (714.3)	58.86 (1495.0)	25.62 (650.7)	20.47 (520.0)	282 (127.9)
800	28.12 (714.2)	58.86 (1495.0)	25.62 (650.7)	20.47 (519.9)	282 (127.9)
1200	42.62 (1082.5)	78.11 (1984.0)	29.62 (752.3)	20.47 (519.9)	509 (230.9)
NEMA 12, 4X Stainless Steel					
30	12.00 (304.8)	39.81 (1011.2)	10.25 (260.4)	5.50 (139.7)	45 (20.43)
60	12.00 (304.8)	39.81 (1011.2)	10.25 (260.4)	5.50 (139.7)	45 (20.43)
100	12.00 (304.8)	39.81 (1011.2)	10.25 (260.4)	5.50 (139.7)	45 (20.43)
200	19.56 (496.8)	55.63 (1413.0)	11.63 (295.4)	6.46 (164.1)	100 (45.4)
400	25.38 (644.7)	74.75 (1898.7)	14.13 (358.9)	8.92 (226.6)	260 (118.04)

NEMA 1, 3R Double-Throw 30–1200 A

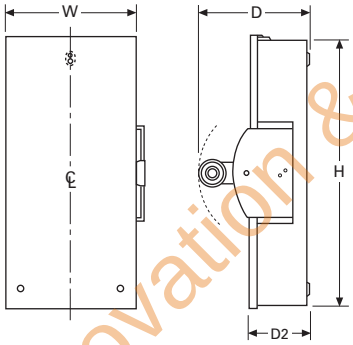

NEMA 12, 4X Double-Throw 30–400 A

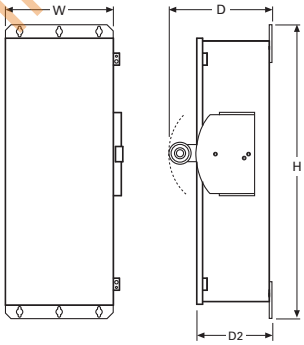

Supplied by Digital Stout Innovation & Trading FZE

EnviroLine Stainless Steel Switch

Contents

Description	*Page*
Product Overview	**V2-T1-2**
General-Duty	**V2-T1-25**
Heavy-Duty	**V2-T1-30**
Heavy-Duty Double Door Safety Switch	**V2-T1-39**
Six-Pole Switches	**V2-T1-43**
Double-Throw Switches	**V2-T1-46**
EnviroLine Stainless Steel Switch	
Product Selection	**V2-T1-54**
Dimensions	**V2-T1-56**
Window Switches	**V2-T1-57**
Receptacle Switches	**V2-T1-60**
Non-Metallic KRYDON Switch	**V2-T1-62**
Shunt Trip Safety Switch	**V2-T1-65**
NEMA 7/9—Hazardous Location Disconnect Switch	**V2-T1-68**
Quick-Connect Switches	**V2-T1-70**
Solar Disconnect Switch	**V2-T1-75**
Mill-Duty Rated, Heavy-Duty Safety Switch	**V2-T1-77**
Elevator Control Switch	**V2-T1-79**
Auxiliary Power Heavy-Duty Safety Switch	**V2-T1-82**
Left-Handed Safety Switch	**V2-T1-86**
Heavy-Duty Surge Switch	**V2-T1-87**
OEM Line Isolation (OLI) Switch	**V2-T1-89**
Pringle Bolted Pressure Switch	**V2-T1-92**
Type DS, Fusible and Non-Fusible	**V2-T1-95**
Type Visi-Flex DE-ION	**V2-T1-98**
Flange Mounted—Variable Depth	**V2-T1-102**
Flange Mounted—Fixed Depth	**V2-T1-106**

EnviroLine Stainless Steel Switch

Product Description

These switches are primarily for use in the meat packing and food processing industries or any application where water is frequently used to hose down equipment. In addition to the stainless steel NEMA 4X enclosure, the interior mechanism, backpan and springs are stainless steel. Ratings for these heavy-duty switches are 30–400 A, 240–600 Vac, available as fusible and non-fusible switches.

Features

- Stainless steel enclosure (304 Grade)
- Stainless steel mechanism (304 Grade)
- 30–400 A
- Horsepower rated
- Suitable for service entrance use
- Stainless steel back pan (304 Grade)
- Stainless steel springs (304 Grade)

Standards and Certifications

- Upper and lower window UL 98 listed and NEMA KS-1 approved
- UL 98
- UL listed File No. E5239

Listed

Scanned by Digital Stout Innovation & Trading FZE

1

Product Selection

DH321NWKX

240 Vac Heavy-Duty, Fusible, Single-Throw Stainless Steel Enclosure and Operating Mechanism

System	Ampere Rating	Fuse Class Provision	Maximum Horsepower Ratings with Time Delay Fuses AC Standard Fuse Single-Phase	Three-Phase	Time Delay Single-Phase	Three-Phase	DC 250 V	NEMA 4X Enclosure Corrosion-Resistant, Stainless Steel Catalog Number
Three-Wire (Two Blades, Two Fuses, S/N), 240 Vac—250 Vdc								
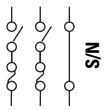	30	H or R	1-1/2	3	3	7-1/2	5	**DH221NWKX** ①
	60	H or R	3	7-1/2	10	15	10	**DH222NWKX**
	100	H or R	7-1/2	15	15	30	20	**DH223NWKX**
	200	H or R	15	25	15	60	40	**DH224NWKX**
	400	H or R	—	50	—	125	50	**DH225NWKX**
Three-Pole, 240 Vac—250 Vdc (Suitable for Service Entrance Use with a Neutral Kit Installed)								
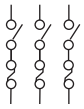	30	H or R	1-1/2	3	—	7-1/2	—	**DH321FWKX** ①
	60	H or R	3	7-1/2	—	15	—	**DH322FWKX**
	100	H or R	—	—	—	—	—	②
	200	H or R	15	25	—	60	40	**DH324FWKX**
	400	H or R	—	50	—	125	50	**DH325FWKX**
Four-Wire (Three Blades, Three Fuses, S/N), 240 Vac—250 Vdc								
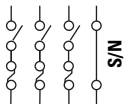	30	H or R	—	3	—	7-1/2	—	**DH321NWKX** ①
	60	H or R	—	7-1/2	—	15	—	**DH322NWKX**
	100	H or R	—	15	—	30	20	**DH323NWKX**
	200	H or R	—	25	—	60	—	**DH324NWKX**
	400	H or R	—	50	—	125	50	**DH325NWKX**

Notes

① 30 A heavy-duty switches with Type J fuse provisions are available from the factory only.

② Contact the Safety Switch Flex Center (**1-888-329-9272** or FlexSwitches@eaton.com) for availability of this product.

See **Page V2-T1-38** for dimensions.

Supplied by Digital Stout Innovation & Trading FZE

DH361UWKX

600 Vac Heavy-Duty, Fusible 277/480 V, Single-Throw Stainless Steel Enclosure and Operating Mechanism

System	Ampere Rating	Fuse Class Provision	Maximum Horsepower Ratings with Time Delay Fuses Single-Phase AC 480 V	Single-Phase AC 600 V	Three-Phase AC 480 V	Three-Phase AC 600 V	DC 250 V	DC 600 V	NEMA 4X Enclosure Corrosion-Resistant, Stainless Steel Catalog Number
Two-Pole, 480 Vac—600 Vac or Vdc ① (Suitable for Service Entrance Use with a Neutral Kit Installed)									
	30	H or R	7-1/2	10	—	—	—	15	**DH261FWKX** ②
	60	H or R	—	—	—	—	—	—	③
	100	H or R	—	—	—	—	—	—	③
	200	H or R	50	50	—	—	—	50	**DH264FWKX**
	400	H or R	—	—	—	—	—	—	③
Three-Pole, 480 Vac—600 Vac, 250 Vdc (Suitable for Service Entrance Use with a Neutral Kit Installed)									
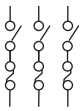	30	H or R	7-1/2	10	15	20	—	—	**DH361FWKX** ②
	60	H or R	20	25	30	50	—	—	**DH362FWKX**
	100	H or R	30	30	60	75	—	—	**DH363FWKX**
	200	H or R	50	50	125	150	—	—	**DH364FWKX**
	400	H or R	—	—	250	350	—	—	**DH365FWKX**
Four-Wire (Three Blades, Three Fuses, S/N) 480 Vac—600 Vac, 250 Vdc									
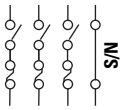	30	H or R	7-1/2	10	20	30	—	—	**DH361NWKX** ②
	60	H or R	20	25	50	60	—	—	**DH362NWKX**
	100	H or R	40	50	75	100	—	—	**DH363NWKX**
	200	H or R	50	50	125	150	—	—	**DH364NWKX**
	400	H or R	—	—	250	350	—	—	**DH365NWKX**

600 Vac Heavy-Duty, Non-Fusible 277/480 V, Single-Throw Stainless Steel Enclosure and Operating Mechanism

System	Ampere Rating	Maximum Horsepower Ratings Single-Phase AC 480 V	Single-Phase AC 600 V	Three-Phase AC 480 V	Three-Phase AC 600 V	DC 250 V	DC 600 V	NEMA 4X Enclosure Corrosion-Resistant, Stainless Steel Catalog Number
Three-Pole, 480 Vac—600 Vac, 250 Vdc (Suitable for Service Entrance Use with a Neutral Kit Installed)								
	30	7-1/2	10	20	30	5	—	**DH361UWKX**
	60	20	25	50	60	10	—	**DH362UWKX**
	100	40	50	75	100	20	—	**DH363UWKX**
	200	50	50	125	150	40	—	**DH364UWKX**
	400	—	—	250	350	50	—	**DH365UWKX**

Notes

① DC rating for 400 A switches is 250 V.

② 30 A heavy-duty switches with Type J fuse provisions are available from the factory only.

③ Contact the Safety Switch Flex Center (**1-888-329-9272** or FlexSwitches@eaton.com) for availability of this product.

See **Page V2-T1-38** for dimensions.

Supplied by Digital Stout Innovation & Trading FZE

1

Dimensions

Approximate Dimensions in Inches (mm)

Heavy-Duty, Non-Fusible, 600 V, Three-Pole, Single-Throw

Ampere Rating	Width (W)	Height (H)	Depth (D)	Depth (D2)	Weight Lbs (kg)
4X Stainless Steel					
30	8.13 (206.5)	12.13 (308.1)	10.00 (254.0)	5.50 (139.7)	17 (7.718)
60	8.13 (206.5)	12.13 (308.1)	10.00 (254.0)	5.50 (139.7)	17 (7.718)
100	11.13 (282.7)	24.00 (609.6)	10.25 (260.4)	5.50 (139.7)	28 (12.712)
200	16.00 (406.4)	34.38 (873.3)	11.50 (292.1)	6.44 (163.6)	55 (24.97)
400	23.00 (584.2)	57.63 (1463.8)	12.63 (320.8)	7.19 (182.6)	125 (56.75)

Heavy-Duty, Fusible, 240 V and 600 V, Three-Pole Solid Neutral, Single-Throw

Ampere Rating	Width (W)	Height (H)	Depth (D)	Depth (D2)	Weight Lbs (kg)
4X Stainless Steel					
30	8.13 (206.5)	17.88 (454.2)	10.00 (254.0)	5.50 (139.7)	22 (9.988)
60	8.13 (206.5)	17.88 (454.2)	10.00 (254.0)	5.50 (139.7)	22 (9.988)
100	11.13 (282.7)	24.00 (609.6)	10.25 (260.4)	5.50 (139.7)	30 (13.62)
200	16.00 (406.4)	34.38 (873.3)	11.50 (292.1)	6.44 (163.6)	61 (27.694)
400	23.00 (584.2)	57.63 (1463.8)	12.63 (320.8)	7.19 (182.6)	135 (61.29)

NEMA 4X Heavy-Duty 30–400 A

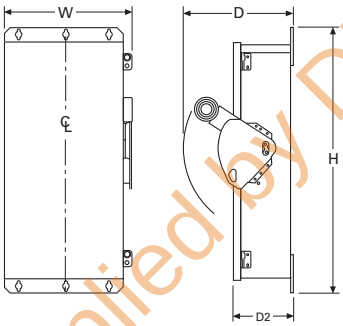

Note: A factory-installed ground lug is supplied in all heavy-duty safety switches.

Supplied by Digital Stout Innovation & Trading FZE

Window Switch

Contents

Description	*Page*
Product Overview	**V2-T1-2**
General-Duty	**V2-T1-25**
Heavy-Duty	**V2-T1-30**
Heavy-Duty Double Door Safety Switch	**V2-T1-39**
Six-Pole Switches	**V2-T1-43**
Double-Throw Switches	**V2-T1-46**
EnviroLine Stainless Steel Switch	**V2-T1-53**
Window Switches	
Product Selection	**V2-T1-58**
Dimensions	**V2-T1-59**
Receptacle Switches	**V2-T1-60**
Non-Metallic KRYDON Switch	**V2-T1-62**
Shunt Trip Safety Switch	**V2-T1-65**
NEMA 7/9—Hazardous Location Disconnect Switch	**V2-T1-68**
Quick-Connect Switches	**V2-T1-70**
Solar Disconnect Switch	**V2-T1-75**
Mill-Duty Rated, Heavy-Duty Safety Switch	**V2-T1-77**
Elevator Control Switch	**V2-T1-79**
Auxiliary Power Heavy-Duty Safety Switch	**V2-T1-82**
Left-Handed Safety Switch	**V2-T1-86**
Heavy-Duty Surge Switch	**V2-T1-87**
OEM Line Isolation (OLI) Switch	**V2-T1-89**
Pringle Bolted Pressure Switch	**V2-T1-92**
Type DS, Fusible and Non-Fusible	**V2-T1-95**
Type Visi-Flex DE-ION	**V2-T1-98**
Flange Mounted—Variable Depth	**V2-T1-102**
Flange Mounted—Fixed Depth	**V2-T1-106**

Window Switches

Product Description

All window switches integrate an external viewing window with the enhanced visible blade feature. This allows users to easily view the trailing edge of the blades to confirm disconnect is open while the switch is in the OFF position.

Features

- 30–1200 A
- Blade visibility when door closed
- Suitable for service entrance use
- NEMA 12, 4 and 4X stainless steel enclosures
- Window material is high-quality laminated safety glass
- External viewing window design is field replaceable—kits available for switches 30–1200 A
- 30 A and 60 A heavy-duty safety switches feature a vertical viewing window
- 100–1200 A heavy-duty safety switches feature a horizontal viewing window(s)
- Ratings are 30–1200 A, 240–600 Vac, fusible and non-fusible. Available in NEMA 12/3R, 4X stainless steel enclosures

Standards and Certifications

- Upper and lower window UL listed and NEMA KS-1 approved
- UL 98
- UL listed File No. E5239

Listed

Seismic Qualifications

- Heavy-duty switches exceed the requirements of Uniform Building Code (UBC) and California Code Title 24 OSP-0011-10, OSP-0012-10

Supplied by Digital Stout Innovation & Trading FZE

1

Product Selection

DH361FDKW

240 Vac Heavy-Duty, Fusible Single-Throw with Upper Viewing Window

System	Ampere Rating	Fuse Class Provision	Maximum Horsepower Ratings with Time Delay Fuses AC Standard Fuse Single-Phase	Standard Fuse Three-Phase	Time Delay Single-Phase	Time Delay Three-Phase	DC 250 V	NEMA 12 Enclosure Industrial, Dust-Tight Catalog Number	NEMA 4 Enclosure Watertight, Painted Steel Catalog Number	NEMA 4X Enclosure Corrosion-Resistant, Stainless Steel Catalog Number
Four-Wire (Three Blades, Three Fuses, S/N), 240 Vac—250 Vdc ①										
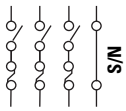	30	H or R	—	3	—	7-1/2	—	DH321NDKW ②③	—	DH321NWKW ③
	60	H or R	—	7-1/2	—	15	—	DH322NDKW ②	—	DH322NWKW
	100	H or R	—	15	—	30	20	DH323NDKW ②	—	DH323NWKW
	200	H or R	—	25	—	60	—	DH324NDKW ②	—	DH324NWKW
	400	H or R	—	50	—	125	50	DH325NDKW ②	DH325NPKW	DH325NWKW
	600	H or R	—	75	—	200	—	DH326NDKW ②	DH326NPKW	DH326NWKW
	800	L	—	100	—	250	—	DH327NDKW ②	DH327NPKW	DH327NWKW

600 Vac Heavy-Duty, Fusible Single-Throw with Upper Viewing Window

System	Ampere Rating	Fuse Class Provision	Maximum Horsepower Ratings with Time Delay Fuses Single-Phase AC 480 V	Single-Phase AC 600 V	Three-Phase AC 480 V	Three-Phase AC 600 V	DC 250 V 600 V	NEMA 12 Enclosure Industrial, Dust-Tight Catalog Number	NEMA 4 Enclosure Watertight, Painted Steel Catalog Number	NEMA 4X Enclosure Corrosion-Resistant, Stainless Steel Catalog Number
Four-Wire (Three Blades, Three Fuses, S/N), 600 Vac—250 Vdc ①										
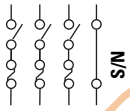	30	H or R	7-1/2	10	15	20	—	DH361NDKW ②③	—	DH361NWKW ③
	60	H or R	20	25	30	50	—	DH362NDKW ②	—	DH362NWKW
	100	H or R	30	40	60	75	—	DH363NDKW ②	—	DH363NWKW
	200	H or R	50	50	125	150	—	DH364NDKW ②	—	DH364NWKW
	400	H or R	—	—	250	350	—	DH365NDKW ②	DH365NPKW	DH365NWKW
	600	H or R	—	—	400	500	—	DH366NDKW ②	DH366NPKW	DH366NWKW
	800	L	—	—	500	500	—	DH367NDKW ②	DH367NPKW	DH367NWKW
	1200	L	—	—	500	500	—	DH368NDKW ④	—	DH368NWKW ④

DH363FWKW

600 Vac Heavy-Duty, Non-Fusible Single-Throw with Upper Viewing Window

System	Ampere Rating	Fuse Class Provision	Maximum Horsepower Ratings with Time Delay Fuses Single-Phase AC 480V	Single-Phase AC 600V	Three-Phase AC 480V	Three-Phase AC 600V	DC 250V 600V	NEMA 12 Enclosure Industrial, Dust-Tight Catalog Number	NEMA 4 Enclosure Watertight, Painted Steel Catalog Number	NEMA 4X Enclosure Corrosion-Resistant, Stainless Steel Catalog Number
Three-Pole—600 Vac, 250 Vdc ① **(Suitable for Service Entrance Use with a Neutral Kit Installed)**										
	30	7-1/2	10	20	30	5	—	DH361UDKW ②	—	DH361UWKW
	60	20	25	50	60	10	—	DH362UDKW ②	—	DH362UWKW
	100	40	50	75	100	20	—	DH363UDKW ②	—	DH363UWKW
	200	50	50	125	150	40	—	DH364UDKW ②	—	DH364UWKW
	400	—	—	250	350	50	—	DH365UDKW ②	DH365UPKW	DH365UWKW
	600	—	—	400	500	—	—	DH366UDKW ②	DH366UPKW	DH366UWKW
	800	—	—	500	500	—	—	DH367UDKW ②	DH367UPKW	DH367UWKW
	1200	—	—	500	500	—	—	DH368UDKW ④	—	DH368UWKW ④

Notes

① For two-pole applications, use outside poles of three-pole switch.

② NEMA 12 enclosures (30–1200 A) can be field modified to meet NEMA 3R rainproof requirements when a factory provided drain hole is opened.

③ 30 A heavy-duty switches with Type J fuse provisions are available from the factory only.

④ NOT suitable for use as service entrance per NEC 215.10 and 230.95.

Supplied by Digital Stout Innovation & Trading FZE

240 Vac Heavy-Duty, Fusible, Single-Throw with Lower Viewing Window ①

System	Ampere Rating	Fuse Class Provision	Maximum Horsepower Ratings with Time Delay Fuses AC — Standard Fuse Single-Phase	Standard Fuse Three-Phase	Time Delay Single-Phase	Time Delay Three-Phase	DC 250 V	NEMA 12/3R Enclosure Industrial, Dust-Tight Catalog Number	NEMA 4 Enclosure Watertight, Painted Steel Catalog Number	NEMA 4X Enclosure Corrosion-Resistant, Stainless Steel Catalog Number
Four-Wire (Three Blades, Three Fuses, S/N), 240 Vac—250 Vdc ②										
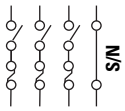	200	H or R	—	25	—	60	—	DH324NDKLW ③	—	DH324NWKLW
	400	H or R	—	50	—	125	50	DH325NDKLW ③	DH325NPKLW	DH325NWKLW
	600	H or R	—	75	—	200	—	DH326NDKLW ③	DH326NPKLW	DH326NWKLW
	800	L	—	100	—	250	—	DH327NDKLW ③	DH327NPKLW	DH327NWKLW
	1200	L	—	—	—	—	—	DH328NDKLW ③	DH328NPKLW	DH328NWKLW

600 Vac Heavy-Duty, Fusible, Single-Throw with Lower Viewing Window ①

System	Ampere Rating	Fuse Class Provision	Maximum Horsepower Ratings with Time Delay Fuses Single-Phase AC 480 V	Single-Phase AC 600 V	Three-Phase AC 480 V	Three-Phase AC 600 V	DC 250 V	NEMA 12/3R Enclosure Industrial, Dust-Tight Catalog Number	NEMA 4 Enclosure Watertight, Painted Steel Catalog Number	NEMA 4X Enclosure Corrosion-Resistant, Stainless Steel Catalog Number
Four-Wire (Three Blades, Three Fuses, S/N), 600 Vac—250 Vdc ②										
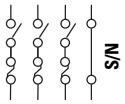	200	H or R	50	50	125	150	—	DH364NDKLW ③	—	DH364NWKLW
	400	H or R	—	—	250	350	—	DH365NDKLW ③	DH365NPKLW	DH365NWKLW
	600	H or R	—	—	400	500	—	DH366NDKLW ③	DH366NPKLW	DH366NWKLW
	800	L	—	—	500	500	—	DH367NDKLW ③	DH367NPKLW	DH367NWKLW
	1200	L	—	—	500	500	—	DH368NDKLW ③④	DH368NPKLW ④	DH368NWKLW ④

Dimensions

Approximate Dimensions in Inches (mm)

Heavy-Duty, Fusible and Non-Fusible with Window

Heavy-Duty, Non-Fusible, 600 V, Three-Pole, Single-Throw

Ampere Rating	Width (W)	Height (H)	Depth (D)	Depth (D2)	Weight Lbs (kg)
NEMA 12/3R, 4, 4X Stainless Steel					
30	8.76 (222.5)	19.08 (484.6)	10.22 (259.6)	5.50 (139.7)	22 (9.988)
60	8.76 (222.5)	19.08 (484.6)	10.22 (259.6)	5.50 (139.7)	22 (9.988)
100	11.79 (299.5)	24.95 (633.7)	10.22 (259.6)	5.50 (139.7)	30 (13.62)
200	16.95 (430.5)	35.38 (898.7)	11.63 (295.4)	6.44 (163.6)	61 (27.694)
400	24.12 (612.6)	57.47 (1459.7)	12.43 (315.7)	7.19 (182.6)	135 (61.29)
600	25.01 (635.3)	62.97 (1599.4)	12.79 (324.9)	8.95 (227.3)	203 (92.162)
800	26.35 (669.3)	71.72 (1821.7)	12.79 (324.9)	8.95 (227.3)	213 (96.702)
1200	43.11 (1095.0)	73.77 (1873.8)	17.15 (435.6)	12.45 (316.2)	510 (231.54)

NEMA 12/3R, 4, 4X Heavy-Duty 30–1200 A

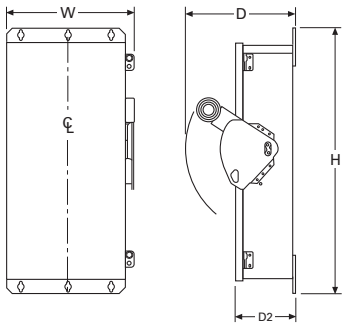

Note: A factory-installed ground lug is supplied in all heavy-duty safety switches.

Notes

① Lower windows are only available for 200–1200 A switches.
② For two-pole applications, use outside poles of three-pole switch.
③ NEMA 12 enclosures (30–1200 A) can be field modified to meet NEMA 3R rainproof requirements when a factory provided drain hole is opened.
④ Not suitable for service entrance per NEC 215.10 and 230.95.

Supplied by Digital Stout Innovation & Trading FZE

1

Receptacle Switch

Contents

Description	*Page*
Product Overview	**V2-T1-2**
General-Duty	**V2-T1-25**
Heavy-Duty	**V2-T1-30**
Heavy-Duty Double Door Safety Switch	**V2-T1-39**
Six-Pole Switches	**V2-T1-43**
Double-Throw Switches	**V2-T1-46**
EnviroLine Stainless Steel Switch	**V2-T1-53**
Window Switches	**V2-T1-57**
Receptacle Switches Product Selection	**V2-T1-61**
Non-Metallic KRYDON Switch	**V2-T1-62**
Shunt Trip Safety Switch	**V2-T1-65**
NEMA 7/9—Hazardous Location Disconnect Switch	**V2-T1-68**
Quick-Connect Switches	**V2-T1-70**
Solar Disconnect Switch	**V2-T1-75**
Mill-Duty Rated, Heavy-Duty Safety Switch	**V2-T1-77**
Elevator Control Switch	**V2-T1-79**
Auxiliary Power Heavy-Duty Safety Switch	**V2-T1-82**
Left-Handed Safety Switch	**V2-T1-86**
Heavy-Duty Surge Switch	**V2-T1-87**
OEM Line Isolation (OLI) Switch	**V2-T1-89**
Pringle Bolted Pressure Switch	**V2-T1-92**
Type DS, Fusible and Non-Fusible	**V2-T1-95**
Type Visi-Flex DE-ION	**V2-T1-98**
Flange Mounted—Variable Depth	**V2-T1-102**
Flange Mounted—Fixed Depth	**V2-T1-106**

Receptacle Switches

Product Description

These heavy-duty switches are pre-wired and interlocked to polarized receptacles for three-phase, three-wire, grounded type power plugs. Receptacles are interlocked to handle mechanisms so that power plugs may not be inserted or removed when the switch is in the ON position unless noted otherwise. Ratings are 30–100 A, 600 Vac, NEMA 12/3R, 4X stainless steel enclosures.

- 30–100 A
- Power plugs not supplied with the receptacle
- Can be supplied with viewing windows

Application Description

These are used for portable power applications such as welders, infrared ovens, batch feeders, conveyors, truck and marine docks.

Standards and Certifications

- UL 98 listed NEMA approved
- NEMA KS-1 approved
- UL listed File No. E5239

Listed

Note: For Cam-Lok and Posi-Lok style receptacles, see Eaton's Quick Connect Switch.

Seismic Qualifications

- Heavy-duty switches exceed the requirements of Uniform Building Code (UBC) and California Code Title 24 OSP-0011-10, OSP-0012-10

Supplied by Digital Stout Innovation & Trading FZE

Product Selection

600 Vac Heavy-Duty, Single-Throw with Receptacle, Fusible, Non-Fusible

DH362FDK2WR

Safety Switch with Receptacle K-Series, Three-Pole, 600 Volt Fuse Clips—Fusible

Ampere Rating			NEMA 12/3R Enclosure	NEMA 12/3R Enclosure with Window	NEMA 4X Enclosure	NEMA 4X Enclosure with Window
Switch	Receptacle	Power Plug	Catalog Number	Catalog Number	Catalog Number	Catalog Number
Crouse-Hinds ARKTITE® Receptacle						
30	30	Accepts Crouse-Hinds® **APJ3485**	**DH361FDK2WR**	**DH361FDK2WRW**	**DH361FWK2WR**	**DH361FWK2WRW**
60	60	**APJ6485**	**DH362FDK2WR**	**DH362FDK2WRW**	**DH362FWK2WR**	**DH362FWK2WRW**
100	100	**APJ10487**	**DH363FDK2WR**	**DH363FDK2WRW**	**DH363FWK2WR**	**DH363FWK2WRW**
Appleton POWERTITE® Receptacle						
30	30	Accepts Appleton **ACP3034BC**	**DH361FD5WRK**	**DH361FD5WRKW**	**DH361FW5WRK**	**DH361FW5WRKW**
60	60	**ACP6034BC**	**DH362FD5WRK**	**DH362FD5WRKW**	**DH362FW5WRK**	**DH362FW5WRKW**
100	100	**ACP1034CD**	**DH363FD5WRK**	**DH363FD5WRKW**	**DH363FW5WRK**	**DH363FW5WRKW**

Safety Switch with Receptacle K-Series, Three-Pole, 600 Volt Fuse Clips—Non-Fusible

Ampere Rating			NEMA 12/3R Enclosure	NEMA 12/3R Enclosure with Window	NEMA 4X Enclosure	NEMA 4X Enclosure with Window
Switch	Receptacle	Power Plug	Catalog Number	Catalog Number	Catalog Number	Catalog Number
Crouse-Hinds ARKTITE Receptacle						
60	60	Accepts Crouse-Hinds **APJ6485**	**DH362UDK2WR**	**DH362UDK2WRW**	**DH362UWK2WR**	**DH362UWK2WRW**
Appleton POWERTITE Receptacle						
30	30	Accepts Appleton **ACP3034BC**	**DH361UD5WRK**	**DH361UD5WRKW**	**DH361UW5WRK**	**DH361UW5WRKW**
60	60	**ACP6034BC**	**DH362UD5WRK**	**DH362UD5WRKW**	**DH362UW5WRK**	**DH362UW5WRKW**

Notes

Contact the Safety Switch Flex Center (**1-888-329-9272** or FlexSwitches@eaton.com) for additional options including viewing windows and other receptacle manufacturers. Power plugs are not available through Eaton.

Supplied by Digital Stout Innovation & Trading FZE

1

Non-Metallic KRYDON Switch

Contents

Description	Page
Product Overview	V2-T1-2
General-Duty	V2-T1-25
Heavy-Duty	V2-T1-30
Heavy-Duty Double Door Safety Switch	V2-T1-39
Six-Pole Switches	V2-T1-43
Double-Throw Switches	V2-T1-46
EnviroLine Stainless Steel Switch	V2-T1-53
Window Switches	V2-T1-57
Receptacle Switches	V2-T1-60
Non-Metallic KRYDON Switch	
Product Selection	V2-T1-63
Dimensions	V2-T1-64
Shunt Trip Safety Switch	V2-T1-65
NEMA 7/9—Hazardous Location Disconnect Switch	V2-T1-68
Quick-Connect Switches	V2-T1-70
Solar Disconnect Switch	V2-T1-75
Mill-Duty Rated, Heavy-Duty Safety Switch	V2-T1-77
Elevator Control Switch	V2-T1-79
Auxiliary Power Heavy-Duty Safety Switch	V2-T1-82
Left-Handed Safety Switch	V2-T1-86
Heavy-Duty Surge Switch	V2-T1-87
OEM Line Isolation (OLI) Switch	V2-T1-89
Pringle Bolted Pressure Switch	V2-T1-92
Type DS, Fusible and Non-Fusible	V2-T1-95
Type Visi-Flex DE-ION	V2-T1-98
Flange Mounted—Variable Depth	V2-T1-102
Flange Mounted—Fixed Depth	V2-T1-106

Non-Metallic KRYDON Switch

Product Description

This switch has a KRYDON™ enclosure. These are compression molded fiberglass reinforced polyester enclosure, which is capable of withstanding almost any corrosive environment. Ratings are 30–200 A, 240–600 Vac, fusible and non-fusible. Enclosure is NEMA 4X rated.

Features

- 30–200A
- KRYDON high-impact strength fiberglass reinforced polyester material
- Horsepower rated
- Suitable for service entrance use
- Fusible and non-fusible
- Stainless steel external hardware

Standards and Certifications

- UL 98 listed File No. E5239

UL Listed

Seismic Qualifications

- Heavy-duty switches exceed the requirements of Uniform Building Code (UBC) and California Code Title 24 OSP-0011-10, OSP-0012-10

Supplied by Digital Stout Innovation & Trading FZE

Product Selection

DH361UCK

240 Vac Heavy-Duty Non-Metallic Fusible

System	Ampere Rating	Fuse Class Provision	Maximum Horsepower Ratings AC Standard Fuse Single-Phase	Standard Fuse Three-Phase	Time Delay Single-Phase	Time Delay Three-Phase	DC 250 V	NEMA 4X Enclosure Corrosion-Resistant, Non-Metallic Catalog Number
Three-Pole, 240 Vac—250 Vdc (Suitable for Service Entrance Use with a Neutral Kit Installed)								
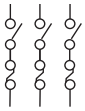	30	H or R	1-1/2	3	—	7-1/2	—	**DH321FCK** ①
	60	H or R	3	7-1/2	—	15	—	**DH322FCK**
	100	H or R	7-1/2	15	—	30	20	**DH323FCK**
	200	H or R	15	25	—	60	40	**DH324FCK**
Four-Wire (Three Blades, Three Fuses, S/N), 240 Vac—250 Vdc								
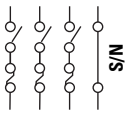	30	H or R	—	3	—	7-1/2	—	**DH321NCK** ①
	60	H or R	—	7-1/2	—	15	—	**DH322NCK**
	100	H or R	—	15	—	30	20	**DH323NCK**
	200	H or R	—	25	—	60	—	**DH324NCK**

600 Vac Heavy-Duty Non-Metallic Fusible

System	Ampere Rating	Fuse Class Provision	Maximum Horsepower Ratings with Time Delay Fuses Single-Phase AC 480 V	Single-Phase AC 600 V	Three-Phase AC 480 V	Three-Phase AC 600 V	DC 250 V	DC 600 V	NEMA 4X Enclosure Corrosion-Resistant, Non-Metallic Catalog Number
Three-Pole, 480 Vac—600 Vac, 250 Vdc (Suitable for Service Entrance Use with a Neutral Kit Installed)									
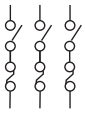	30	H or R	7-1/2	10	15	20	—	—	**DH361FCK** ①
	60	H or R	20	25	30	50	—	—	**DH362FCK**
	100	H or R	30	30	60	75	—	—	**DH363FCK**
	200	H or R	50	50	125	150	—	—	**DH364FCK**
Four-Wire (Three Blades, Three Fuses, S/N), 480 Vac—600 Vac, 250 Vdc									
	30	H or R	7-1/2	10	15	20	—	—	**DH361NCK** ①
	60	H or R	20	25	30	50	—	—	**DH362NCK**
	100	H or R	30	30	60	75	—	—	**DH363NCK**
	200	H or R	50	50	125	150	—	—	**DH364NCK**

600 Vac Heavy-Duty Non-Metallic Non-Fusible 277/480–600 V

System	Ampere Rating	Maximum Horsepower Ratings with Time Delay Fuses Single-Phase AC 240 V	Single-Phase AC 480 V	Single-Phase AC 600 V	Three-Phase AC 240 V	Three-Phase AC 480 V	Three-Phase AC 600 V	DC 250 V	DC 600 V	NEMA 4X Enclosure Corrosion-Resistant, Non-Metallic Catalog Number
Three-Pole, 480 Vac—600 Vac, 250 Vdc (Suitable for Service Entrance Use with a Neutral Kit Installed)										
	30	3	7-1/2	10	10	20	30	5	—	**DH361UCK**
	60	10	20	25	20	50	60	10	—	**DH362UCK**
	100	20	40	50	40	75	100	20	—	**DH363UCK**
	200	15	50	50	60	125	150	40	—	**DH364UCK**

Note

① 30 A heavy-duty switches with Type J fuse provisions are available from the factory only.

Supplied by Digital Stout Innovation & Trading FZE

1

Dimensions

Approximate Dimensions in Inches (mm)

Note: Dimensions are for estimating purposes only.

240 Vac and 600 Vac Heavy-Duty Non-Metallic

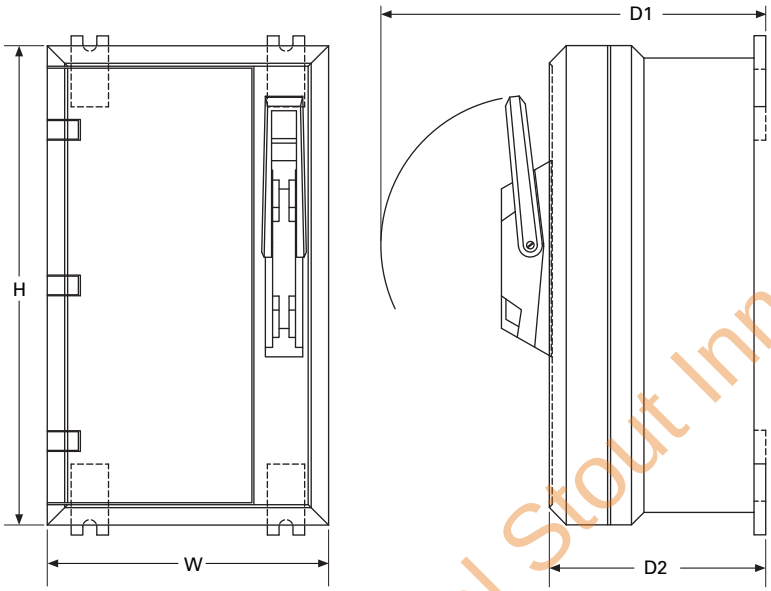

Non-Metallic NEMA 4X Rated Safety Switches, Fusible and Non-Fusible

Amperage	Height Height (H)	Width Width (W)	Depth Depth (D1)	Depth (D2)	Weight Lbs (kg)
30A	19.25 (489.0)	11.30 (287.0)	15.46 (392.7)	8.63 (219.2)	32 (14.5)
60A	19.25 (489.0)	11.30 (287.0)	15.46 (392.7)	8.63 (219.2)	32 (14.5)
100A	27.25 (692.2)	15.30 (388.6)	16.46 (418.1)	9.70 (246.4)	45 (20.4)
200A	27.25 (692.2)	25.30 (642.6)	16.46 (418.1)	9.70 (246.4)	77 (35.0)

Supplied by Digital Stout Innovation & Trading FZE

Shunt Trip Safety Switch

Contents

Description	Page
Product Overview	V2-T1-2
General-Duty	V2-T1-25
Heavy-Duty	V2-T1-30
Heavy-Duty Double Door Safety Switch	V2-T1-39
Six-Pole Switches	V2-T1-43
Double-Throw Switches	V2-T1-46
EnviroLine Stainless Steel Switch	V2-T1-53
Window Switches	V2-T1-57
Receptacle Switches	V2-T1-60
Non-Metallic KRYDON Switch	V2-T1-62
Shunt Trip Safety Switch	V2-T1-65
NEMA 7/9—Hazardous Location Disconnect Switch	V2-T1-68
Quick-Connect Switches	V2-T1-70
Solar Disconnect Switch	V2-T1-75
Mill-Duty Rated, Heavy-Duty Safety Switch	V2-T1-77
Elevator Control Switch	V2-T1-79
Auxiliary Power Heavy-Duty Safety Switch	V2-T1-82
Left-Handed Safety Switch	V2-T1-86
Heavy-Duty Surge Switch	V2-T1-87
OEM Line Isolation (OLI) Switch	
Additional Features and Benefits	V2-T1-90
Catalog Number Selection	V2-T1-90
Modifications	V2-T1-90
Technical Data and Specifications	V2-T1-90
Pringle Bolted Pressure Switch	V2-T1-92
Type DS, Fusible and Non-Fusible	V2-T1-95
Type Visi-Flex DE-ION	V2-T1-98
Flange Mounted—Variable Depth	V2-T1-102
Flange Mounted—Fixed Depth	V2-T1-106

Shunt Trip Safety Switch

Product Description

The shunt trip technology enhances safety by providing a means to open a safety switch electronically. When using an emergency stop, safety interlock or similar means, the remote operation capability of the shunt trip switch no longer requires personnel to manually open the switch with the handle, enhancing safety and improving productivity.

The shunt trip safety switch can be configured to meet the needs of safety applications in industrial and commercial environments. The switches can be signaled to electronically operate the trip mechanism and interrupt the flow of power when a defined electrical condition is detected via protection relay.

The shunt trip safety switch builds on Eaton's extensive portfolio of safety switch solutions, incorporating a side-handle operation mechanism and visible blade indication that have decades of successful installation and operation.

Application Examples

- Arc energy reduction ①
- Ground fault ①
- Remote opening (distant from switch)
- E-stop
- Safety interlocking
- Machinery OEM interlocking
- Cost-effective solution for high-interrupt applications

Features

- 30–1200 A (240–600 Vac)
- Enclosure ratings: NEMA 12/3R/1, 4 (painted steel), 4X (stainless steel)
- Horsepower ratings are the same as Eaton's standard heavy-duty safety switches
- Fusible devices have short-circuit ratings of up to 200 kAIC
- Variety of coil voltages available
- Visible means of disconnect
- Standard heavy-duty safety switch design with integrated shunt trip module
- Passes Class 1 ground fault testing (1200% opening)
- Integral ground fault available for 480 Vac service entrance applications (NEC 230.95)
- Integral arc energy reduction system available (NEC 240.67)
- Overcurrent protection ②

Standards and Certifications

- UL 98 file number E5239 (600 Vac maximum)
- CSA C22.2 No. 4, file number LL69743 (600 Vac maximum)

Note: CSA listing not applicable to integrated arc energy reduction system.

Notes

① Relay and applicable sensors/CTs available integrated into safety switch.

② When an arc energy reduction relay is integrated into the switch, the relay includes overcurrent protection. A time delay dial sets the overcurrent response curve to allow coordination with the fuse time/current curve.

Supplied by Digital Stout Innovation & Trading FZE

1

Catalog Number Selection

Shunt Trip Safety Switch

STS 3 6 8 N W 3 2 - 1 B 00

Switch Series
STS = Shunt trip switch (UL)

Number of Poles
2 = Two-pole
3 = Three-pole
4 = Four-pole

Voltage
2 = 240 Vac max.
6 = 600 Vac max.

Ampere Rating

1 = 30 A	**5** = 400 A
2 = 60 A	**6** = 600 A
3 = 100 A	**7** = 800 A
4 = 200 A	**8** = 1200 A

Protection
F = Fusible without neutral
N = Fusible with neutral
U = Non-fusible ①

NEMA Type Enclosure Rating
D = NEMA 12/3R/1
P = NEMA 4 (painted steel)
W = NEMA 4X, stainless 304
X = NEMA 4X, stainless 316

Shunt Trip Coil Voltage ②
3 = 120 Vac
6 = 24 Vdc

Auxiliary Switch
BLANK = No auxiliary switches
1 = 1NO/1NC alarm switch only
2 = 1NO/1NC auxiliary contact only
3 = 2NO/2NC auxiliary contacts only
4 = 1NO/1NC auxiliary contact and 1NO/1NC alarm switch
5 = 2NO/2NC auxiliary contacts and 1NO/1NC alarm switch

CPT Voltage
0 = No CPT
1 = 480 Vac ③
2 = 208 Vac
3 = 240 Vac
4 = 600 Vac ③

Type of Protective Relay ①④⑥⑦
0 = No relay
A = Arc energy reduction relay ⑤
B = Ground fault relay ⑤
C = Arc energy reduction relay/ ground fault relay ⑤

Additional Options/ Modifications
00 = No accessories
CL = Copper lugs
CP = Control pole
0J = Factory-converted provisions for Class J fusing
0N = Factory-installed neutral for non-fused switch
0T = Factory-converted provisions for Class T fusing
0W = Viewing window over switch blades

Notes
① Relays can only be used with fusible switches.
② For alternate coil voltages, please contact the Flex Center.
③ Available for 600 Vac switches only.
④ Shunt trip safety switch with relay protection must use 120 Vac coils.
⑤ Available for 400–1200 A fusible switches only.
⑥ Only one relay option allowed.
⑦ Relay viewing window standard with relay option.

Supplied by Digital Stout Innovation & Trading FZE

Dimensions

Shunt Trip Safety Switch—240 Vac and 600 Vac—Dimensions and Ratings

Ampere Rating	Fuse Class ①	Number of Poles	Enclosure Dimensions ②, Exterior in Inches (mm) Height (H)	Width (W)	Depth (D_1)	Depth (D_2)
Fusible						
30	H or R	2, 3 or 4 ③	21.58 (548.1)	11.58 (294.1)	11.43 (290.3)	5.58 (141.7)
60	H or R	2, 3 or 4 ③	21.58 (548.1)	11.58 (294.1)	11.43 (290.3)	5.58 (141.7)
100	H or R	2, 3 or 4 ③	24.95 (633.7)	14.89 (378.2)	11.51 (282.4)	5.58 (141.7)
200	H or R	2, 3 or 4	35.38 (898.7)	20.11 (510.8)	11.61 (294.9)	6.45 (163.8)
400	H or R	2, 3 or 4	57.47 (1459.7)	27.29 (693.2)	12.43 (315.7)	7.42 (188.5)
600	H or R	2, 3	62.97 (1599.4)	28.29 (718.6)	12.43 (315.7)	7.42 (188.5)
800	L	2, 3	71.72 (1821.7)	29.54 (750.3)	12.43 (315.7)	7.42 (188.5)
1200	L	2, 3	72.50 (1841.5)	47.23 (1199.6)	23.15 (588.0)	12.46 (316.5)
Non-Fusible						
30	—	2, 3 or 4 ③	21.58 (548.1)	11.58 (294.1)	11.43 (290.3)	5.58 (141.7)
60	—	2, 3 or 4 ③	21.58 (548.1)	11.58 (294.1)	11.43 (290.3)	5.58 (141.7)
100	—	2, 3 or 4 ③	24.95 (633.7)	14.89 (378.2)	11.51 (282.4)	5.58 (141.7)
200	—	2, 3 or 4	35.38 (898.7)	20.11 (510.8)	11.61 (294.9)	6.45 (163.8)
400	—	2, 3 or 4	57.47 (1459.7)	27.29 (693.2)	12.43 (315.7)	7.42 (188.5)
600	—	2, 3	62.97 (1599.4)	28.29 (718.6)	12.43 (315.7)	7.42 (188.5)
800	—	2, 3	71.72 (1821.7)	29.54 (750.3)	12.43 (315.7)	7.42 (188.5)
1200	L	2, 3	72.50 (1841.5)	47.23 (1199.6)	23.15 (588.0)	12.46 (316.5)

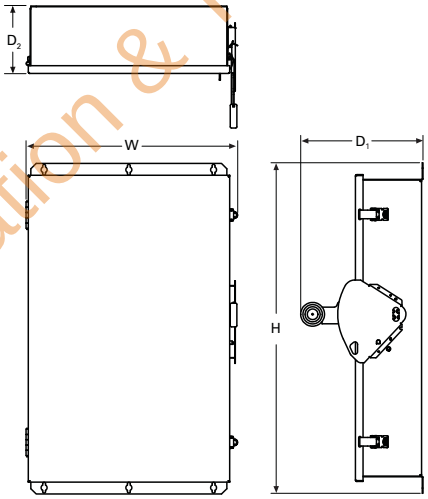

Terminal/Lug Wire Range

Ampere Rating	Minimum—Maximum	Wire Type
30	#14–#2	Cu/Al
60	#14–#2	Cu/Al
100	#14–#1/0	Cu/Al
200	#6–300 kcmil	Cu/Al
400	(2) 1/0–300 kcmil or (1) 1/0–750 kcmil	Cu/Al
600	(1) #2–600 kcmil and (1) 1/0–750 kcmil	Cu/Al
800	(4) 1/0–750 kcmil	Cu/Al
1200	(4) 1/0–750 kcmil	Cu/Al

Notes

① Class H fuse clips supplied as standard on fusible devices 30–600 A, Class L for 800–1200 A; Class R, J, T fuse clips available.

② Accurate for all enclosure NEMA type ratings—12/3R/1, 4, 4X stainless steel.

③ Four-pole devices are wider than dimension for 30, 60 and 100 A devices. Consult factory for details.

Supplied by Digital Stout Innovation & Trading FZE

DS361UX

Contents

Description	Page
Product Overview	V2-T1-2
General-Duty	V2-T1-25
Heavy-Duty	V2-T1-30
Heavy-Duty Double Door Safety Switch	V2-T1-39
Six-Pole Switches	V2-T1-43
Double-Throw Switches	V2-T1-46
EnviroLine Stainless Steel Switch	V2-T1-53
Window Switches	V2-T1-57
Receptacle Switches	V2-T1-60
Non-Metallic KRYDON Switch	V2-T1-62
Solar Disconnect Switch	V2-T1-65
NEMA 7/9—Hazardous Location Disconnect Switch	
Product Selection	V2-T1-69
Dimensions	V2-T1-69
Quick-Connect Switches	V2-T1-70
Solar Disconnect Switch	V2-T1-75
Mill-Duty Rated, Heavy-Duty Safety Switch	V2-T1-77
Elevator Control Switch	V2-T1-79
Auxiliary Power Heavy-Duty Safety Switch	V2-T1-82
Left-Handed Safety Switch	V2-T1-86
Heavy-Duty Surge Switch	V2-T1-87
OEM Line Isolation (OLI) Switch	V2-T1-89
Pringle Bolted Pressure Switch	V2-T1-92
Type DS, Fusible and Non-Fusible	V2-T1-95
Type Visi-Flex DE-ION	V2-T1-98
Flange Mounted—Variable Depth	V2-T1-102
Flange Mounted—Fixed Depth	V2-T1-106

NEMA 7/9—Hazardous Location Disconnect Switch

Product Description

Eaton's Type DS switch is used as the switching device. Ratings are 30–100 A, 600 Vac, fusible and non-fusible.

Application Description

The cast aluminum enclosure is ideally suited for harsh industrial applications including petrochemical facilities, mining operations, pharmaceutical plants and wastewater treatment facilities.

Features

- 30–100 A
- 600 Vac fusible and non-fusible

Standards and Certifications

- UL 98
- UL listed File No. E5239

Compliances

UL Classified— Standard 886 File No. E84577	CSA Certified— Standard C22.2 File No. LR 42131-6
Class I, Division 1 and 2, Groups B, C and D	Class I, Division 1 and 2, Groups B, C and D
Class II, Division 1 and 2, Groups E, F and G	Class II, Division 1 and 2, Groups E, F and G
Class III, Division 1 and 2	Class III, Division 1 and 2
NEMA 7/9	NEMA 7/9
Zone 1, IIB + H_2	Zone 1, IIB + H_2

c UL Listed

Supported by Digital Stout Innovation & Trading FZE

Product Selection

DS361UX

NEMA 7/9 Enclosure Sizes—Fusible

Ampere Rating	Maximum Horsepower Ratings Three-Phase AC 480 V	600 V	DC 250 V	Fuse Class Provision	Number of Poles	Voltage	Enclosure Number	Catalog Number
30	15	20	5	J	3	600 Vac, 125/250 Vdc	1	**DS361FX**
60	30	50	10	J	3	600 Vac, 125/250 Vdc	2	**DS362FX**
100	60	75	20	J	3	600 Vac, 125/250 Vdc	3	**DS363FX**

NEMA 7/9 Enclosure Sizes—Non-Fusible

Ampere Rating	Maximum Horsepower Ratings Three-Phase AC 480 V	600 V	DC 250 V	Fuse Class Provision	Number of Poles	Voltage	Enclosure Number	Catalog Number
30	15	20	5	—	3	600 Vac, 125/250 Vdc	1	**DS361UX**
60	30	50	10	—	3	600 Vac, 125/250 Vdc	1	**DS362UX**
100	60	75	20	—	3	600 Vac, 125/250 Vdc	2	**DS363UX**

Dimensions

Approximate Dimensions in Inches (mm)

NEMA 7/9 Enclosure Sizes ①

Dimension	Non-Fusible Disconnect Switch Catalog Number DS361UX	DS362UX	DS363UX	Fusible Disconnect Switch Catalog Number DS361FX	DS362FX	DS363FX
A	9.74 (247.0)	9.90 (251.0)	10.28 (261.0)	10.02 (255.0)	9.90 (251.0)	10.40 (264.0)
B	5.00 (127.0)	7.00 (178.0)	9.00 (229.0)	7.00 (178.0)	7.00 (178.0)	15.00 (380.0)
C	10.47 (266.0)	12.53 (318.0)	14.67 (373.0)	12.67 (322.0)	12.53 (318.0)	17.31 (440.0)
D	11.13 (283.0)	15.13 (384.0)	17.13 (435.0)	13.13 (333.0)	15.13 (384.0)	11.50 (292.0)
E	12.47 (317.0)	16.53 (420.0)	18.67 (474.0)	14.67 (373.0)	16.53 (420.0)	23.31 (592.0)
F	3.50 (89.0)	3.50 (89.0)	3.50 (89.0)	3.50 (89.0)	3.50 (89.0)	3.50 (89.0)
Weight in lb (kg)	33 (15)	51 (23)	72 (33)	47 (21)	51 (23)	108 (49)

NEMA 7/9—30–100 A

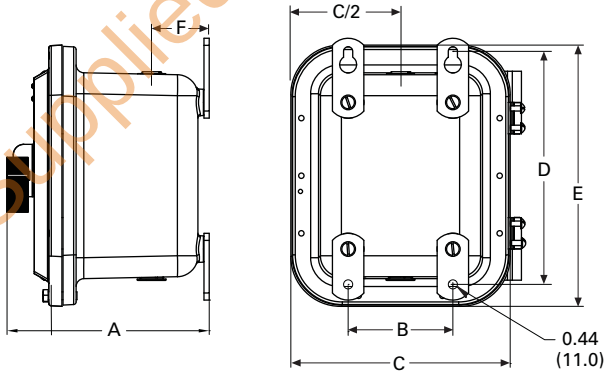

Note

① Accessories and modifications shown on **Page V2-T1-15** are NOT applicable to NEMA 7/9 disconnect switches.

Supplied by Digital Stout Innovation & Trading FZE

1

Quick-Connect, Single-Throw and Double-Throw Switches

Contents

Description	*Page*
Product Overview	**V2-T1-2**
General-Duty	**V2-T1-25**
Heavy-Duty	**V2-T1-30**
Heavy-Duty Double Door Safety Switch	**V2-T1-39**
Six-Pole Switches	**V2-T1-43**
Double-Throw Switches	**V2-T1-46**
EnviroLine Stainless Steel Switch	**V2-T1-53**
Window Switches	**V2-T1-57**
Receptacle Switches	**V2-T1-60**
Non-Metallic KRYDON Switch	**V2-T1-62**
Shunt Trip Safety Switch	**V2-T1-65**
NEMA 7/9—Hazardous Location Disconnect Switch	**V2-T1-68**
Quick-Connect Switches	
Catalog Number Selection	**V2-T1-71**
Product Selection	**V2-T1-73**
Dimensions	**V2-T1-74**
Mill-Duty Rated, Heavy-Duty Safety Switch	**V2-T1-77**
Elevator Control Switch	**V2-T1-79**
Auxiliary Power Heavy-Duty Safety Switch	**V2-T1-82**
Left-Handed Safety Switch	**V2-T1-86**
Heavy-Duty Surge Switch	**V2-T1-87**
OEM Line Isolation (OLI) Switch	**V2-T1-89**
Pringle Bolted Pressure Switch	**V2-T1-92**
Type DS, Fusible and Non-Fusible	**V2-T1-95**
Type Visi-Flex DE-ION	**V2-T1-98**
Flange Mounted—Variable Depth	**V2-T1-102**
Flange Mounted—Fixed Depth	**V2-T1-106**

Quick-Connect Switches

Product Description

These heavy-duty switches are available as single-throw and double-throw designs with Cam-Lok or Posi-Lok receptacles. Ratings are 240 V, 600 Vac, fusible and non-fusible.

- 30–1200 A
- NEMA 1 or 3R enclosures
- Provision for 200% neutral
- Non-magnetic metal mounting plate
- Crouse-Hinds "J" Power Series E1015, E1016, E1017 cam connectors
- Crouse-Hinds E200, E400 Posi-Lok panels
- Connector plugs are typically not provided, but may be special ordered
- Matching plug and cord sets are available from Eaton

Features

Eaton's individual cable connector receptacle switches provide a convenient and safe way to quickly connect and disconnect portable equipment. The load side terminals are factory wired to individual receptacles located behind an interlocked door for added safety. The switch cannot be turned to the ON position without first closing the receptacle compartment door.

A spring-loaded flap door in the receptacle compartment allows the cables to exit the compartment, but seals the compartment when the switch is not in use. For outdoor applications, this will reduce the possibility of insects building nests in the receptacle compartment.

- Available in double-throw and single-throw designs
- Single-throw receptacles can wire to line or load side
- Service entrance rated

An additional flap door on the main compartment allows for quick connection in the event that the appropriate plugs are not readily available.

Standards and Certifications

- UL listed File No. E5239

UL Listed

Seismic Qualifications

- Heavy-duty switches exceed the requirements of Uniform Building Code (UBC) and California Code Title 24 OSP-0011-10, OSP-0012-10

Product Selection

For price and availability, contact the Switching Device Flex Center at 1-888-329-9272 or FlexSwitches@eaton.com.

Supplied by Digital Stout Innovation & Trading FZE

Catalog Number Selection

Quick Connect Safety Switch

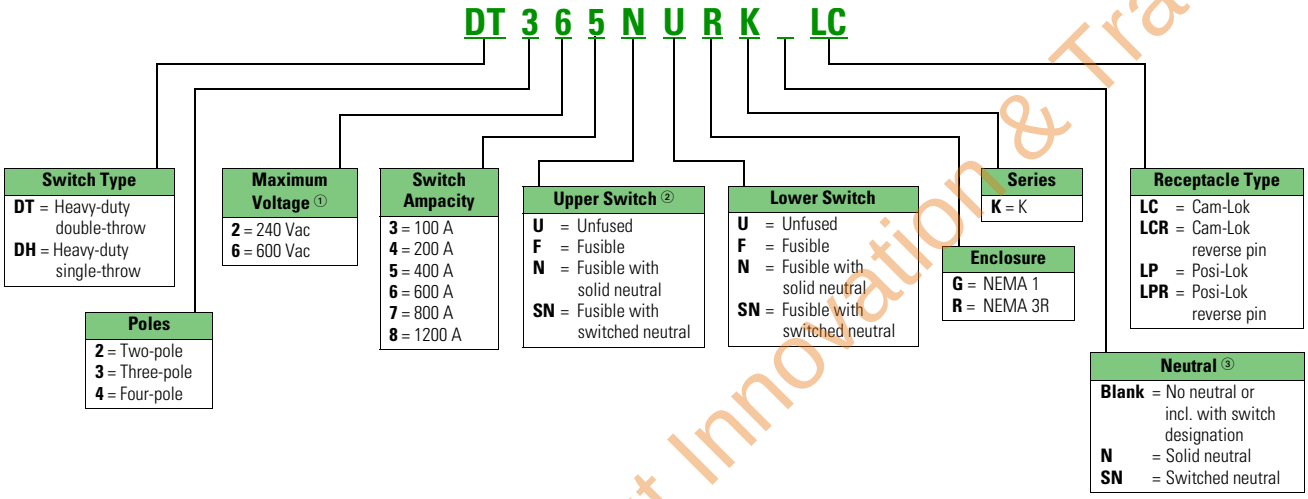

Cord Set

Example: 100 ft cord set needed for a DT364NRKLC.

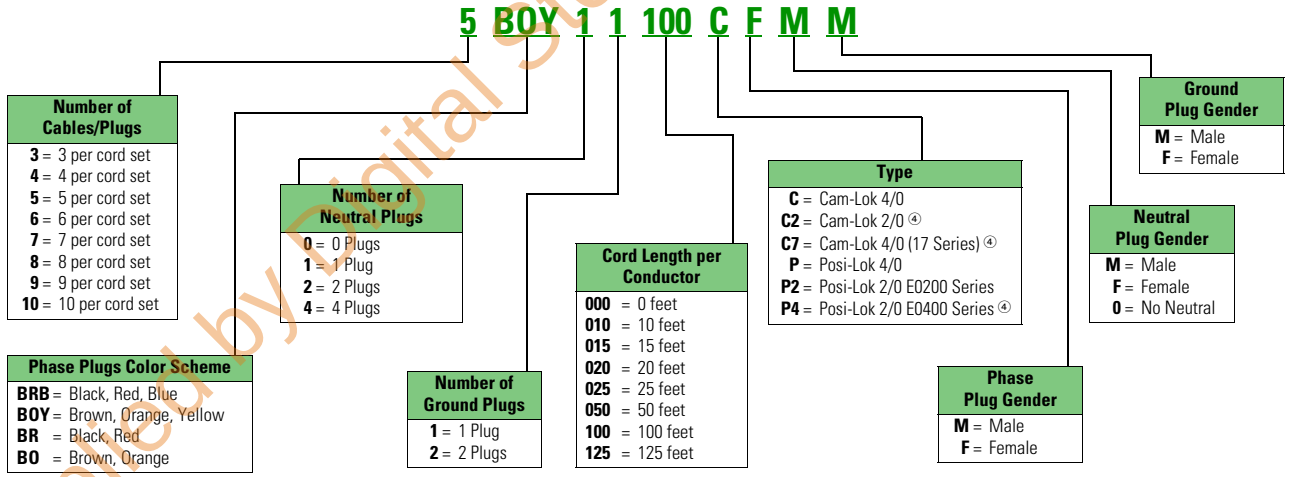

Notes

① Receptacle colors are voltage specific. See table on **Page V2-T1-72** for standard colors offered.

② When upper and lower switches are the same, the switch configuration is consolidated in one letter (e.g., "U" not "UU"). Also, a switch with a neutral will have either a solid neutral or a switched neutral, not both. Lastly, a switched neutral pole is never fused.

③ This field is only used when a switch is completely non-fused.

④ Customer special requests, not common.

We use Type W 4/0 CU flex cable.

This table is intended for use in breaking down existing catalog numbers. It is not intended for building new catalog numbers.

Supplied by Digital Stout Innovation & Trading FZE

Standard Receptacle Color Codes provided on Switches

Matching plug and cord sets are available from Eaton.

Single-Throw Switches

	Ground				Neutral				Phase A				Phase B				Phase C			
	Gender		Color		Gender		Color		Gender		Color		Gender		Color		Gender		Color	
Suffix	**Male**	**Female**	**240 V**	**600 V**	**Male**	**Female**	**240 V**	**600 V**	**Male**	**Female**	**240 V**	**600 V**	**Male**	**Female**	**240 V**	**600 V**	**Male**	**Female**	**240 V**	**600 V**
LC	■	—	G	G	■	—	WH	WH	—	■	BK	BR	—	■	RD	OR	—	■	BL	YL
LCR	—	■	G	G	—	■	WH	WH	■	—	BK	BR	■	—	RD	OR	■	—	BL	YL
LP	—	■	G	G	—	■	WH	WH	—	■	BK	BR	—	■	RD	OR	—	■	BL	YL
LPR	■	—	G	G	■	—	WH	WH	■	—	BK	BR	■	—	RD	OR	■	—	BL	YL

Double-Throw Switches

	Ground				Neutral				Phase A				Phase B				Phase C			
	Gender		Color		Gender		Color		Gender		Color		Gender		Color		Gender		Color	
Suffix	**Male**	**Female**	**240 V**	**600 V**	**Male**	**Female**	**240 V**	**600 V**	**Male**	**Female**	**240 V**	**600 V**	**Male**	**Female**	**240 V**	**600 V**	**Male**	**Female**	**240 V**	**600 V**
LC	—	■	G	G	—	■	WH	WH	■	—	BK	BR	■	—	RD	OR	■	—	BL	YL
LCR	■	—	G	G	■	—	WH	WH	—	■	BK	BR	—	■	RD	OR	—	■	BL	YL
LP	■	—	G	G	■	—	WH	WH	■	—	BK	BR	■	—	RD	OR	■	—	BL	YL
LPR	—	■	G	G	—	■	WH	WH	—	■	BK	BR	—	■	RD	OR	—	■	BL	YL

Legend

G = Green	BK = Black	RD = Red	BL = Blue
WH = White	BR = Brown	OR = Orange	YL = Yellow

Note: Chart shows typical color codes, other colors can be substituted.

Supplied by Digital Stout Innovation & Trading FZE

Product Selection

Quick-Connect Double-Throw

Lug Capacity and Fusing

Available Lug Capacities of the Double-Throw Switch Assembly with Cam-Lok or Posi-Lok Receptacles

Double-Throw Switch Size—Cam-Lok or Posi-Lok Receptacles	Standard Fuse	Service Terminal Openings	Load Terminal Openings	Switched Neutral Pole Load Terminal Openings	Solid Neutral Terminal Openings	Ground Terminal Openings	Receptacle Bypass Terminal
100	H or R	(1) 1/0–14 AWG Cu/Al	(1) 1/0–14 AWG Cu/Al	(1) 1/0–14 AWG Cu/Al	(2) 1/0–14 AWG, (1) 2–14 AWG Cu/Al	(3) 2–14 AWG Cu/Al	(1) 10–32 Screw mounting
200	H or R	(1) 300 kcmil–6 AWG Cu/Al	(1) 250 kcmil–6 AWG Cu/Al	(1) 250 kcmil–6 AWG Cu/Al	(2) 250 kcmil–6 AWG, (1) 1/0–14 AWG, (1) 2–14 AWG Cu/Al	(3) 2–14 AWG Cu/Al	(2) 1/4 Studs, 1.75-inch spacing
400	T	(1) 750 kcmil–1/0 or (2) 300 kcmil–1/0 Cu/Al	(1) 750 kcmil–1/0 or (2) 300 kcmil–1/0 Cu/Al	(1) 750 kcmil–1/0 or (2) 300 kcmil–1/0 Cu/Al	(6) 500 kcmil, (6) 250 kcmil–6 AWG Cu/Al	(4) 250 kcmil–6 AWG Cu/Al	(2) 1/2-13 UNC studs, 1.75-inch spacing
600	T	(4) 750 kcmil–1/0 Cu/Al	(4) 750 kcmil–1/0 Cu/Al	(4) 750 kcmil–1/0 Cu/Al	(6) 500–250 kcmil, (4) 250 kcmil–6 AWG Cu/Al	(4) 250 kcmil–6 AWG Cu/Al	(2) 1/2-13 UNC studs, 1.75-inch spacing
800	T	(4) 750 kcmil–1/0 Cu/Al	(4) 750 kcmil–1/0 Cu/Al	(4) 750 kcmil–1/0 Cu/Al	(6) 500–250 kcmil, (4) 250 kcmil–6 AWG Cu/Al	(4) 250 kcmil–6 AWG Cu/Al	(2) 1/2-13 UNC studs, 1.75-inch spacing
1200	L	(4) 750 kcmil–1/0 Cu/Al	(4) 750 kcmil–1/0 Cu/Al	(4) 750 kcmil–1/0 Cu/Al	(6) 500–250 kcmil, (4) 250 kcmil–6 AWG Cu/Al	(4) 250 kcmil–6 AWG Cu/Al	—

Quick-Connect Single-Throw Company Switch

Lug Capacity and Fusing

Company Switch Available Lug Capacities of the Single-Throw Switch Assembly with Cam-Lok or Posi-Lok Receptacles

Switch Ampacity	Standard Fuse	Line Cu/Al	Load Terminal Openings Cu/Al ①	Switched Neutral Pole Load Terminal Openings Cu/Al	Solid Neutral Terminal Openings	Ground Terminal Openings Cu/Al	Receptacle Bypass Terminal
100	H or R	(1) 1/0–14 AWG	(1) 1/0–14 AWG	(1) 1/0–14 AWG	(2) 14 AWG–1/0 and (2) 6–14 AWG	(1) 2–14 AWG	(1) 1/0–14 AWG
200	H or R	(1) 300 kcmil–6 AWG	(1) 300 kcmil–6 AWG	(1) 300 kcmil–6 AWG	(2) 6 AWG–300 kcmil and (2) 6–14 AWG	(2) 2–14 AWG	(1) 300 kcmil–6 AWG
400	H or R	(1) 750 kcmil–1/0 or (2) 300 kcmil–1/0	(1) 750 kcmil–1/0 or (2) 300 kcmil–1/0	(1) 750 kcmil–1/0 or (2) 300 kcmil–1/0	(2x) (2) 1/0–300 kcmil or (1) 1/0–750 kcmil and (3) 6 AWG–250 kcmil	(2) 250 kcmil–6 AWG	Crimp lug provisions
600	H or R	(1) 750 kcmil–1/0 and (1) 600 kcmil–2	(1) 750 kcmil–1/0 and (1) 600 kcmil–2	(1) 750 kcmil–1/0 and (1) 600 kcmil–2	(2) 2 AWG–600 kcmil and 1/0–750 kcmil and (3) 6 AWG–250 kcmil	(2) 250 kcmil–6 AWG	Crimp lug provisions
800	L	(4) 750 kcmil–1/0	(4) 750 kcmil–1/0	(4) 750 kcmil–1/0	(2x) (4) 1/0–750 kcmil and (3) 6 AWG–250 kcmil	(2) 250 kcmil–6 AWG	Crimp lug provisions
1200	L	(4) 750 kcmil–1/0	(4) 750 kcmil–1/0	(4) 750 kcmil–1/0	(2x) (4) 1/0–750 kcmil and (3) 6 AWG–250 kcmil	(2) 250 kcmil–6 AWG	—

Quick-Connect Single-Throw Generator Switch

Lug Capacity and Fusing

Generator Switch Available Lug Capacities of the Single-Throw Switch Assembly with Cam-Lok or Posi-Lok Receptacles

Switch Ampacity	Standard Fuse	Load Cu/Al	Service Terminal Openings Cu/Al ②	Switched Neutral Pole Load Terminal Openings Cu/Al	Solid Neutral Terminal Openings	Ground Terminal Openings Cu/Al	Receptacle Bypass Terminal
100	H or R	(1) 1/0–14 AWG	(1) 1/0–14 AWG	(1) 1/0–14 AWG	(2) 14 AWG–1/0 and (2) 6–14 AWG	(1) 2–14 AWG	(1) 1/0–14 AWG
200	H or R	(1) 300 kcmil–6 AWG	(1) 300 kcmil–6 AWG	(1) 300 kcmil–6 AWG	(2) 6 AWG–300 kcmil and (2) 6–14 AWG	(2) 2–14 AWG	(1) 300 kcmil–6 AWG
400	H or R	(1) 750 kcmil–1/0 or (2) 300 kcmil–1/0	(1) 750 kcmil–1/0 or (2) 300 kcmil–1/0	(1) 750 kcmil–1/0 or (2) 300 kcmil–1/0	(2x) (2) 1/0–300 kcmil or (1) 1/0–750 kcmil and (3) 6 AWG–250 kcmil	(2) 250 kcmil–6 AWG	(1) 750 kcmil–1/0 or (2) 300 kcmil–1/0
600	H or R	(4) 750 kcmil–1/0	(4) 750 kcmil–1/0	(4) 750 kcmil–1/0	2x) (4) 1/0–750 kcmil and (3) 6 AWG–250 kcmil	(2) 250 kcmil–6 AWG	(4) 750 kcmil–1/0
800	L	(4) 750 kcmil–1/0	(4) 750 kcmil–1/0	(4) 750 kcmil–1/0	(2x) (4) 1/0–750 kcmil and (3) 6 AWG–250 kcmil	(2) 250 kcmil–6 AWG	(4) 750 kcmil–1/0
1200	L	(4) 750 kcmil–1/0	(4) 750 kcmil–1/0	(4) 750 kcmil–1/0	(2x) (4) 1/0–750 kcmil and (3) 6 AWG–250 kcmil	(2) 250 kcmil–6 AWG	—

Notes

① Load side terminals are factory wired to receptacles.

② Line side terminals are factory wired to receptacles.

Supplied by Digital Stout Innovation & Trading FZE

1

Dimensions

Approximate Dimensions in Inches (mm)

Note: Dimensions are for estimating purposes only.

Quick Connect Double Throws, Fusible and Non-Fusible, 240 V and 600 V (1 of 2)

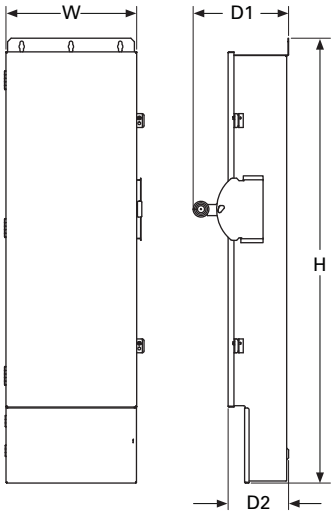

Ampere Rating	Width (W)	Height (H)	Depth (D1)	Depth (D2)	Weight lbs (kg)
100	18.57 (471.7)	62.89 (1597.4)	13.56 (344.4)	8.59 (218.2)	240 (109)
200	18.57 (471.7)	62.89 (1597.4)	13.56 (344.4)	8.59 (218.2)	240 (109)
1200	42.62 (1083.0)	87.78 (2230.0)	29.62 (752.0)	20.47 (520.0)	1025 (465)

Quick Connect Double Throws, Fusible and Non-Fusible, 240 V and 60 0V (2 of 2)

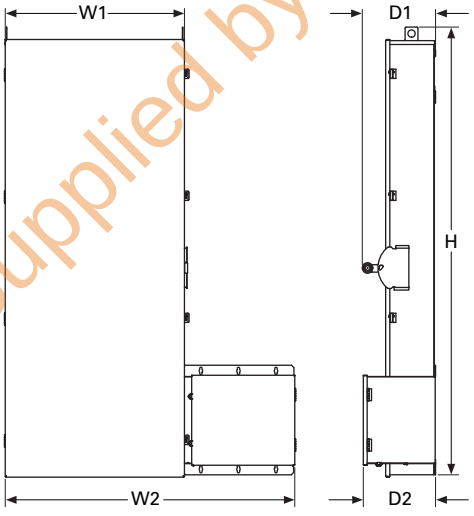

Ampere Rating	Width (W1)	Width (W2)	Height (H)	Depth (D1)	Depth (D2)	Weight lbs (kg)
400	26.68 (677.7)	50.18 (1274.6)	92.49 (2349.2)	15.61 (396.5)	15.40 (391.2)	800 (363)
600	38.18 (969.8)	61.68 (1566.7)	92.49 (2349.2)	15.61 (396.5)	15.40 (391.2)	820 (372)
800	38.18 (969.8)	61.68 (1566.7)	92.49 (2349.2)	15.61 (396.5)	15.40 (391.2)	820 (372)

Quick Connect Single Throws, Fusible and Non-Fusible, 240 V and 600 V

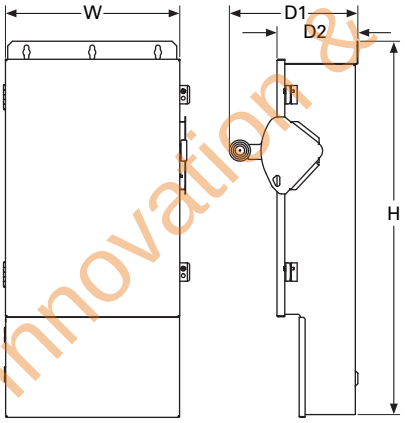

Ampere Rating	Width (W)	Height (H)	Depth (D1)	Depth (D2)	Weight lbs (kg)
100	18.57 (471.1)	39.12 (993.6)	13.68 (347.5)	8.61 (218.7)	85 (39)
200	18.57 (471.1)	41.87 (1063.5)	13.68 (347.5)	8.61 (218.7)	140 (64)
400	32.87 (834.9)	73.79 (1874.3)	16.10 (408.9)	11.14 (283.0)	370 (168)
600	32.87 (834.9)	73.79 (1874.3)	16.10 (408.9)	11.14 (283.0)	370 (168)
800	32.87 (834.9)	85.04 (2160.0)	21.73 (551.9)	16.79 (426.5)	540 (245)
1200	42.62 (1083.0)	90.23 (2292.0)	29.62 (752.0)	20.47 (520.0)	915 (415)

Supplied by Digital Stout Innovation & Trading FZE

Solar Disconnect Switch

Contents

Description	*Page*
Product Overview	**V2-T1-2**
General-Duty	**V2-T1-25**
Heavy-Duty	**V2-T1-30**
Heavy-Duty Double Door Safety Switch	**V2-T1-39**
Six-Pole Switches	**V2-T1-43**
Double-Throw Switches	**V2-T1-46**
EnviroLine Stainless Steel Switch	**V2-T1-53**
Window Switches	**V2-T1-57**
Receptacle Switches	**V2-T1-60**
Non-Metallic KRYDON Switch	**V2-T1-62**
Shunt Trip Safety Switch	**V2-T1-65**
NEMA 7/9—Hazardous Location Disconnect Switch	**V2-T1-68**
Quick-Connect Switches	**V2-T1-70**
Solar Disconnect Switch	
Standards and Certifications	**V2-T1-75**
Product Selection	**V2-T1-76**
Mill-Duty Rated, Heavy-Duty Safety Switch	**V2-T1-77**
Elevator Control Switch	**V2-T1-79**
Auxiliary Power Heavy-Duty Safety Switch	**V2-T1-82**
Left-Handed Safety Switch	**V2-T1-86**
Heavy-Duty Surge Switch	**V2-T1-87**
OEM Line Isolation (OLI) Switch	**V2-T1-89**
Pringle Bolted Pressure Switch	**V2-T1-92**
Type DS, Fusible and Non-Fusible	**V2-T1-95**
Type Visi-Flex DE-ION	**V2-T1-98**
Flange Mounted—Variable Depth	**V2-T1-102**
Flange Mounted—Fixed Depth	**V2-T1-106**

Solar Disconnect Switch

Product Description

This heavy-duty, single-pole switch is capable of switching 1–600 Vdc circuits. Ratings are 30–600 A, 600 Vdc, fusible and non-fusible.

Features

- Clear line-shield covering all live parts
- For factory modifications, refer to **Pages V2-T1-15**

Standards and Certifications

- UL 98 listed, File No. E5239 and marked suitable for NEC Article 690 applications to UL 1741

Listed

Seismic Qualifications

- Heavy-duty switches exceed the requirements of Uniform Building Code (UBC) and California Code Title 24 OSP-0011-10, OSP-0012-10

Supplied by Digital Stout Innovation & Trading FZE

600 Vdc Heavy-Duty Fusible and Non-Fusible

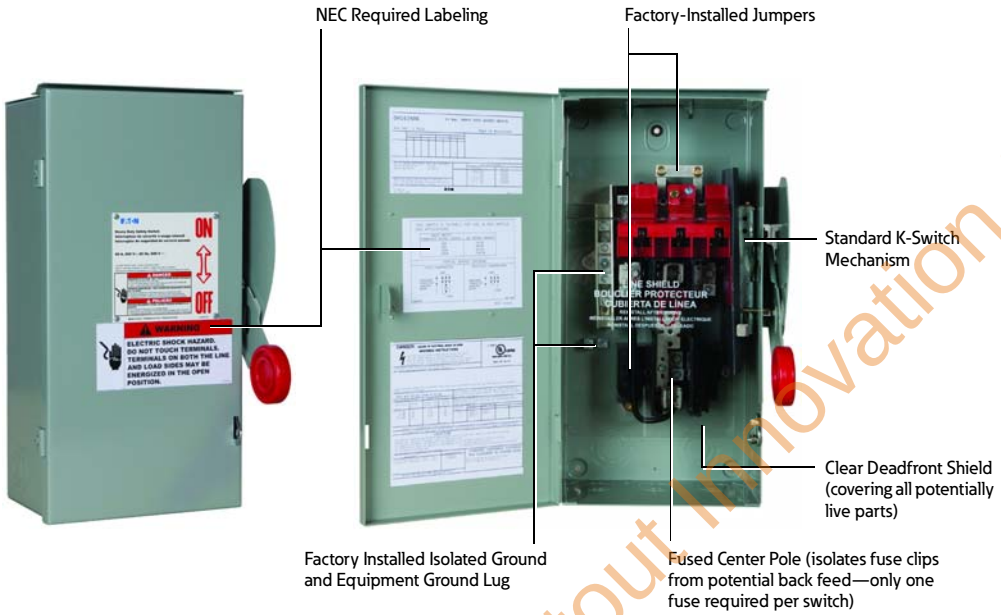

Product Selection

Solar Disconnect Switches

Ampere Rating	Fuse Class	NEMA 3R Catalog Number	NEMA 4X Catalog Number	NEMA 12 Catalog Number
30	R	DH161NRK	DH161NWK	DH161NDK
		DH161URKN	DH161UWKN	DH161UDKN
60	R	DH162NRK	DH162NWK	DH162NDK
		DH162URKN	DH162UWKN	DH162UDKN
100	R	DH163NRK	DH163NWK	DH163NDK
		DH163URKN	DH163UWKN	DH163UDKN
200	R	DH164NRK	DH164NWK	DH164NDK
		DH164URKN	DH164UWKN	DH164UDKN
400	R	DH165NRK	DH165NWK	DH165NDK
		DH165URKN	DH165UWKN	DH165UDKN
600	R	DH166NRK	DH166NWK	DH166NDK
		DH166URKN	DH166UWKN	DH166UDKN

Supplied by Digital Stout Innovation & Trading FZE

DH361FWK-GCL

Contents

Description	*Page*
Product Overview	V2-T1-2
General-Duty	V2-T1-25
Heavy-Duty	V2-T1-30
Heavy-Duty Double Door Safety Switch	V2-T1-39
Six-Pole Switches	V2-T1-43
Double-Throw Switches	V2-T1-46
EnviroLine Stainless Steel Switch	V2-T1-53
Window Switches	V2-T1-57
Receptacle Switches	V2-T1-60
Non-Metallic KRYDON Switch	V2-T1-62
Shunt Trip Safety Switch	V2-T1-65
NEMA 7/9—Hazardous Location Disconnect Switch	V2-T1-68
Quick-Connect Switches	V2-T1-70
Solar Disconnect Switch	V2-T1-75
Mill-Duty Rated, Heavy-Duty Safety Switch Product Selection	V2-T1-78
Elevator Control Switch	V2-T1-79
Auxiliary Power Heavy-Duty Safety Switch	V2-T1-82
Left-Handed Safety Switch	V2-T1-86
Heavy-Duty Surge Switch	V2-T1-87
OEM Line Isolation (OLI) Switch	V2-T1-89
Pringle Bolted Pressure Switch	
Type DS, Fusible and Non-Fusible	V2-T1-95
Type Visi-Flex DE-ION	V2-T1-98
Flange Mounted—Variable Depth	V2-T1-102
Flange Mounted—Fixed Depth	V2-T1-106

Mill-Duty Rated, Heavy-Duty Safety Switch

Product Description

This heavy-duty, single-throw safety switch is rated 240 V, 600 Vac, 30–600 A, fusible and non-fusible.

- Horsepower rated
- Suitable for service entrance use
- Factory-installed copper ground lug
- Copper terminal lugs
- Fuse pullers through 200 A
- For factory modifications, refer to **Page V2-T1-15**

Standards and Certifications

- UL listed File No. E5239

UL Listed

Seismic Qualifications

- Heavy-duty switches exceed the requirements of Uniform Building Code (UBC) and California Code Title 24 OSP-0011-10, OSP-0012-10

Supplied by Digital Stout Innovation & Trading FZE

1

Product Selection

DH361FWK-GCL

Fusible

System	Ampere Rating	Fuse Class Provision	Maximum Horsepower Ratings with Time Delay Fuses AC Standard Fuse Single-Phase	Standard Fuse Three-Phase	Time Delay Single-Phase	Time Delay Three-Phase	DC 250 V	DC 600 V	NEMA 12 Enclosure Industrial, Dust-Tight Catalog Number	NEMA 4X Enclosure Corrosion-Resistant, Stainless Steel Catalog Number
Three-Pole—240 Vac, 250 Vdc (Suitable for Service Entrance Use with a Neutral Kit Installed) ①										
	30	H	1-1/2	3	—	7-1/2	—	—	**DH321FDK-GCL ②**	**DH321FWK-GCL**
	60	H	3	7-1/2	—	15	—	—	**DH322FDK-GCL ②**	**DH322FWK-GCL**
	100	H	7-1/2	15	—	30	20	—	**DH323FDK-GCL ②**	**③**
	200	H	15	25	—	60	40	—	**DH324FDK-GCL ②**	**DH324FWK-GCL**
	400	H	—	50	—	125	50	—	**DH325FDK-GCL ②**	**DH325FWK-GCL**
	600	H	—	75	—	200	—	—	**DH326FDK-GCL ②**	**DH326FWK-GCL**
Two-Pole—480 Vac—600 Vac or DC ⑤ (Suitable for Service Entrance Use with a Neutral Kit Installed) ①										
	30	H	7-1/2	10	—	—	—	15	**DH261FDK-GCL ②**	**DH261FWK-GCL**
	60	H	20	25	—	—	—	25	**DH262FDK-GCL ②**	**③ or ④**
	100	H	30	40	—	—	—	25	**DH263FDK-GCL ②**	**③ or ④**
	200	H	50	50	—	—	—	50	**DH264FDK-GCL ②**	**DH264FWK-GCL**
Three-Pole—480 Vac—600 Vac, 250 Vdc (Suitable for Service Entrance Use with a Neutral Kit Installed) ①										
	30	H	7-1/2	10	15	20	—	—	**DH361FDK-GCL ②**	**DH361FWK-GCL**
	60	H	20	25	30	50	—	—	**DH362FDK-GCL ②**	**DH362FWK-GCL**
	100	H	30	40	60	75	—	—	**DH363FDK-GCL ②**	**DH363FWK-GCL**
	200	H	50	50	125	150	—	—	**DH364FDK-GCL ②**	**DH364FWK-GCL**
	400	H	—	—	250	350	—	—	**DH365FDK-GCL ②**	**DH365FWK-GCL**
	600	H	—	—	400	500	—	—	**DH366FDK-GCL ②**	**DH366FWK-GCL**

Non-Fusible 277/480–600V

System	Ampere Rating	Fuse Class Provision	Maximum Horsepower Ratings AC Standard Fuse Single-Phase	Standard Fuse Three-Phase	Time Delay Single-Phase	Time Delay Three-Phase	DC 250 V	DC 600 V	NEMA 12 Enclosure Industrial, Dust-Tight Catalog Number	NEMA 4X Enclosure Corrosion-Resistant, Stainless Steel Catalog Number
Three-Pole—480 Vac—600 Vac, 250 Vdc ⑥ (Suitable for Service Entrance use with a Neutral Kit Installed) ①										
	30	—	7-1/2	10	20	30	5	—	**DH361UDK-GCL ②**	**DH361UWK-GCL**
	60	—	20	25	50	60	10	—	**DH362UDK-GCL ②**	**DH362UWK-GCL**
	100	—	40	50	75	100	20	—	**DH363UDK-GCL ②**	**DH363UWK-GCL**
	200	—	50	50	125	150	40	—	**DH364UDK-GCL ②**	**DH364UWK-GCL**
	400	—	—	—	250	350	50	—	**DH365UDK-GCL ②**	**DH365UWK-GCL**
	600	—	—	—	400	500	—	—	**DH366UDK-GCL ②**	**DH366UWK-GCL**

Notes

① Contact the Safety Switch Flex Center (**1-888-329-9272** or FlexSwitches@eaton.com) for copper neutrals.
② NEMA 12 enclosures (30–600 A) can be field modified to meet NEMA 3R rainproof requirements when a factory provided drain hole is opened.
③ Contact the Safety Switch Flex Center (**1-888-329-9272** or FlexSwitches@eaton.com) for availability of this product.
④ Use three-pole catalog numbers below for 600 Vac, 250 Vdc maximum applications. For 600 Vdc, see note ③.
⑤ DC rating for 400–600 A switches is 250 V.
⑥ For two-pole applications, use outside poles of three-pole switch.

Supplied by Digital Stout Innovation & Trading FZE

Elevator Control Switch

Contents

Description	*Page*
Product Overview	V2-T1-2
General-Duty	V2-T1-25
Heavy-Duty	V2-T1-30
Heavy-Duty Double Door Safety Switch	V2-T1-39
Six-Pole Switches	V2-T1-43
Double-Throw Switches	V2-T1-46
EnviroLine Stainless Steel Switch	V2-T1-53
Window Switches	V2-T1-57
Receptacle Switches	V2-T1-60
Non-Metallic KRYDON Switch	V2-T1-62
Shunt Trip Safety Switch	V2-T1-65
NEMA 7/9—Hazardous Location Disconnect Switch	V2-T1-68
Quick-Connect Switches	V2-T1-70
Solar Disconnect Switch	V2-T1-75
Mill-Duty Rated, Heavy-Duty Safety Switch	V2-T1-77
Elevator Control Switch	
Catalog Number Selection	V2-T1-80
Technical Data and Specifications	V2-T1-80
Dimensions	V2-T1-81
Auxiliary Power Heavy-Duty Safety Switch	V2-T1-82
Left-Handed Safety Switch	V2-T1-86
Heavy-Duty Surge Switch	V2-T1-87
OEM Line Isolation (OLI) Switch	V2-T1-89
Pringle Bolted Pressure Switch	V2-T1-92
Type DS, Fusible and Non-Fusible	V2-T1-95
Type Visi-Flex DE-ION	V2-T1-98
Flange Mounted—Variable Depth	V2-T1-102
Flange Mounted—Fixed Depth	V2-T1-106

Supplied by Digital Stout Innovation & Trading FZE

Elevator Control Switch

Features, Benefits and Functions

Standard Features

- 30–400 A, 600 Vac three-phase fused power switch
- 200,000 A rms short-circuit current rating
- Shunt trip 120 V
- Control power terminal block
- Ground lug per NEC
- Class J Fuse mounting only (Class J Fuses not included)
- Key to test switch 120 V
- Mechanically interlocked auxiliary contact for hydraulic elevators with automatic recall (5 A, 120 Vac rated) 1NO, 1NC

Optional Features

- Control power transformer with fuses and blocks
- Fire safety interface relay
- Pilot light—ON
- Isolated neutral lug (oversized 200% rated neutral option available where required by excessive nonlinear loads)
- Fire alarm voltage monitoring relay (to monitor shunt trip voltage)
- NEMA 3R, 4 and 12 enclosures available through 200 A
- Phase failure and undervoltage relay available, consult factory
- For added protection, use Eaton fuse covers to improve maintenance and personnel protection, through 200 A (OSHA 1910.333, Paragraph C)

Standards and Certifications

- UL 98 Enclosed and Deadfront Switch Guide 96NK3917, File No. E182262
- NEMA 1, UL 50, listed enclosure
- cUL® per Canadian Standards C22.2, No. 0-M91-CAN/CSA® C22.2, No. 4-M89 Enclosed Switch

Listed

Seismic Qualifications

- Heavy-duty switches exceed the requirements of Uniform Building Code (UBC) and California Code Title 24 OSP-0011-10, OSP-0012-10

1

Catalog Number Selection

Elevator Control Switch

ES 1 T2 R2 G F1 3 N B _ _

Prefix
ES = Elevator control switch

Ampere Rating
1 = 30 A
2 = 60 A
3 = 100 A
4 = 200 A
5 = 400 A

Control Transformer
T2 = 208 V
T3 = 240 V
T1 = 480 V
T4 = 600 V

Fire Safety Interface Relay (3PDT, 10A, 120V)
R2 = 24 Vdc coil
R1 = 120 Vac coil

Pilot Light ON
G = Green
R = Red
W = White

Fire Alarm Voltage Monitoring Relay (To Monitor Shunt Trip Voltage)
F1 = Single-pole ①
F3 = Three-pole ①

Enclosure Options (NEMA 1 Standard With No Suffix Designation Required)
3 = NEMA 3R
D = NEMA 12
P = NEMA 4 painted steel

Neutral Lug
N = Isolated full capacity

Auxiliary Contacts ② and Surge Protection ③
Blank = None
B = Additional 1NO/1NC Auxiliary Contacts
C = Surge Protection ③
E = Additional 1NO/1NC Auxiliary Contact and Surge Protection ③

Key to Test
Blank = Includes key to test
X = Omit ④

Options/ Modifications ⑤
Blank = No mods
SS = 304 stainless steel
NP = Nameplate

Catalog Number Example: ES3T1R1GF3

- 100A S.T. switch 480V-3P—ES3
- 480–120 V CPT—T1
- 120 Vac coil fire safety interface relay—R1
- Pilot light—ON (Green)—G
- Fire alarm voltage monitoring relay (three-pole)—F3

Technical Data and Specifications

Elevator Control Switch Maximum hp Rating—Sizing Based on Motor Type

Voltage Rating (Vac Three-Phase)	Ampere Rating 30 A, ES1			60 A, ES2			100 A, ES3			200 A, ES4			400 A, ES5		
	A	B	C	A	B	C	A	B	C	A	B	C	A	B	C
208	5	5	3	10	10	10	20	15	15	40	40	30	—	—	—
240	5	5	5	10	10	10	20	20	15	50	40	30	—	—	—
480	10	10	10	30	25	20	50	40	30	100	75	75	—	—	—
600	15	15	10	30	30	25	60	50	40	125	100	100	—	—	—

Notes
① F3 Option only available with R1 relay selection.
② All Elevator Control Switches come with 1NO/1NC auxiliary contact as standard.
③ For specific information on Eaton's SP1 surge protective devices, refer to Product Aid PA01005006E.
④ Required by some codes in Arizona.
⑤ Not in Bid Manager® but available through the Flex Center (FlexSwitches@Eaton.com or 1-888-329-9272).

Supplied by Digital Stout Innovation & Trading FZE

Dimensions

Approximate Dimensions in Inches (mm)

Note: Dimensions are for estimating purposes only.

Elevator Control Switch Dimensions and Lug Data

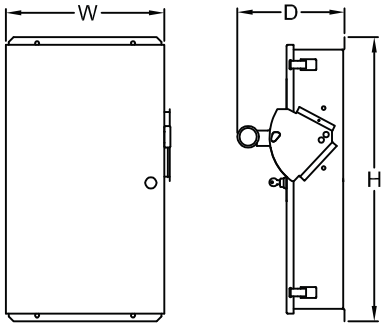

Ampere Rating	NEMA 1 ① Height	Width	Depth	NEMA 3R, 12 ② Height	Width	Depth	Catalog Number
30	29.62 (752.3)	16.35 (415.4)	11.18 (283.9)	29.62 (752.3)	16.35 (415.4)	11.18 (283.9)	**ES1**
60	29.62 (752.3)	16.35 (415.4)	11.18 (283.9)	29.62 (752.3)	16.35 (415.4)	11.18 (283.9)	**ES2**
100	29.62 (752.3)	16.35 (415.4)	11.18 (283.9)	29.62 (752.3)	16.35 (415.4)	11.18 (283.9)	**ES3**
200	32.63 (828.9)	20.38 (517.8)	11.28 (286.4)	32.63 (828.9)	20.38 (517.8)	11.28 (286.4)	**ES4**
400	54.63 (1387.7)	25.21 (640.3)	12.69 (322.3)	54.63 (1387.7)	25.21 (640.3)	12.69 (322.3)	**ES5**

Lug Data

Ampere Rating	Line Side Lug Range	Load Side Lug Range
30	#14–1/0	#14–#2
60	#14–1/0	#14–#2
100	#14–1/0	#14–1/0
200	#4–4/0	#4–300 kcmil
400	(2) #2–500 kcmil	(2) 1/0–300 kcmil or (1) 1/0–750 kcmil

Notes

① Standard oversize enclosure to mount control power transformer fire safety interface relay and control terminal blocks.

② Contact factory for dimensions for NEMA 4 enclosure.

Supplied by Digital Stout Innovation & Trading FZE

1

DH323FRKA1240

Contents

Description	*Page*
Product Overview	**V2-T1-2**
General-Duty	**V2-T1-25**
Heavy-Duty	**V2-T1-30**
Heavy-Duty Double Door Safety Switch	**V2-T1-39**
Six-Pole Switches	**V2-T1-43**
Double-Throw Switches	**V2-T1-46**
EnviroLine Stainless Steel Switch	**V2-T1-53**
Window Switches	**V2-T1-57**
Receptacle Switches	**V2-T1-60**
Non-Metallic KRYDON Switch	**V2-T1-62**
Shunt Trip Safety Switch	**V2-T1-65**
NEMA 7/9—Hazardous Location Disconnect Switch	**V2-T1-68**
Quick-Connect Switches	**V2-T1-70**
Solar Disconnect Switch	**V2-T1-75**
Mill-Duty Rated, Heavy-Duty Safety Switch	**V2-T1-77**
Elevator Control Switch	**V2-T1-79**
Auxiliary Power Heavy-Duty Safety Switch	
Catalog Number Selection	**V2-T1-83**
Product Selection	**V2-T1-83**
Dimensions	**V2-T1-85**
Left-Handed Safety Switch	**V2-T1-86**
Heavy-Duty Surge Switch	**V2-T1-87**
OEM Line Isolation (OLI) Switch	**V2-T1-87**
Pringle Bolted Pressure Switch	**V2-T1-92**
Type DS, Fusible and Non-Fusible	**V2-T1-95**
Type Visi-Flex DE-ION	**V2-T1-98**
Flange Mounted—Variable Depth	**V2-T1-102**
Flange Mounted—Fixed Depth	**V2-T1-106**

Auxiliary Power Heavy-Duty Safety Switch

Product Description

NEC Article 210.63 requires that a 125 V, single-phase, 15 or 20 A rated receptacle outlet be installed at an accessible location for the servicing of heating, air-conditioning and refrigeration equipment. The receptacle must be located on the same level and within 25 ft (7.5 m) of the heating, air-conditioning and refrigeration equipment. Eaton's heavy-duty safety switch is an ideal solution for these applications, including elimination of the need for running a separate 120 V circuit to the rooftop.

Features

- 30–200 A
- Horsepower rated
- NEMA 3R outdoor enclosure standard
- 15A ground fault receptacle standard

Standards and Certifications

- UL listed File No. E5239

Listed

Seismic Qualifications

- Heavy-duty switches exceed the requirements of Uniform Building Code (UBC) and California Code Title 24 OSP-0011-10, OSP-0012-10

Supplied by Digital Stout Innovation & Trading FZE

Catalog Number Selection

Auxiliary Power Heavy-Duty Safety Switch

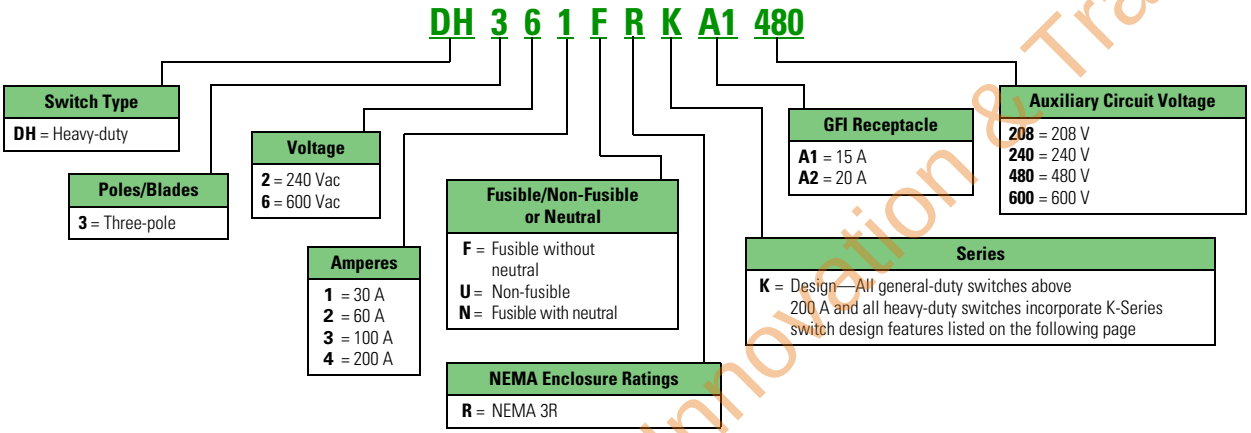

Product Selection

Non-Fusible 240 Vac–600 Vac—Three-Pole

Ampere Rating	Maximum Horsepower Ratings Single-Phase AC 240 V	480 V	600 V	Three-Phase AC 240 V	480 V	600 V	15A GFI Receptacle Catalog Number	20A GFI Receptacle Catalog Number
208 Vac Auxiliary Circuit Voltage								
30	—	—	—	—	—	—	**DH321URKA1208**	**DH321URKA2208**
60	—	—	—	—	—	—	**DH322URKA1208**	**DH322URKA2208**
100	—	—	—	—	—	—	**DH323URKA1208**	**DH323URKA2208**
200	—	—	—	—	—	—	**DH324URKA1208**	**DH324URKA2208**
240 Vac Auxiliary Circuit Voltage								
30	3	—	—	10	—	—	**DH321URKA1240**	**DH321URKA2240**
60	10	—	—	20	—	—	**DH322URKA1240**	**DH322URKA2240**
100	20	—	—	40	—	—	**DH323URKA1240**	**DH323URKA2240**
200	15	—	—	60	—	—	**DH324URKA1240**	**DH324URKA2240**
480 Vac Auxiliary Circuit Voltage								
30	3	7-1/2	10	10	20	30	**DH361URKA1480**	**DH361URKA2480**
60	10	20	25	20	50	60	**DH362URKA1480**	**DH362URKA2480**
100	20	40	50	40	75	100	**DH363URKA1480**	**DH363URKA2480**
200	15	50	50	60	125	150	**DH364URKA1480**	**DH364URKA2480**
600 Vac Auxiliary Circuit Voltage								
30	3	7-1/2	10	10	20	30	**DH361URKA1600**	**DH361URKA2600**
60	10	20	25	20	50	60	**DH362URKA1600**	**DH362URKA2600**
100	20	40	50	40	75	100	**DH363URKA1600**	**DH363URKA2600**
200	15	50	50	60	125	150	**DH364URKA1600**	**DH364URKA2600**

Note

Contact the Safety Switch Flex Center (**1-888-329-9272** or FlexSwitches@eaton.com) for additional options, including 20 A GFI receptacles.

Supplied by Digital Stout Innovation & Trading FZE

1

DH323FRKA1240

Fusible 240 Vac—Three-Pole

Ampere Rating	Fuse Type Provision	Maximum Horsepower Ratings (AC) Standard Fuse Single-Phase	Standard Fuse Three-Phase	Time Delay Single-Phase	Time Delay Three-Phase	15A GFI Receptacle Catalog Number	20A GFI Receptacle Catalog Number
208 Vac Auxiliary Circuit Voltage							
30	H	—	—	—	—	**DH321FRKA1208**	**DH321FRKA2208**
60	H	—	—	—	—	**DH322FRKA1208**	**DH322FRKA2208**
100	H	—	—	—	—	**DH323FRKA1208**	**DH323FRKA2208**
200	H	—	—	—	—	**DH324FRKA1208**	**DH324FRKA2208**
240 Vac Auxiliary Circuit Voltage							
30	H	1-1/2	3	—	7-1/2	**DH321FRKA1240**	**DH321FRKA2240**
60	H	3	7-1/2	—	15	**DH322FRKA1240**	**DH322FRKA2240**
100	H	7-1/2	15	—	30	**DH323FRKA1240**	**DH323FRKA2240**
200	H	15	25	—	60	**DH324FRKA1240**	**DH324FRKA2240**

Fusible 600 Vac—Three-Pole

Ampere Rating	Fuse Type Provision	Maximum Horsepower Ratings with Time Delay Fuses Single-Phase AC 480 V	Single-Phase AC 600 V	Three-Phase AC 480 V	Three-Phase AC 600 V	15A GFI Receptacle Catalog Number	20A GFI Receptacle Catalog Number
480 Vac Auxiliary Circuit Voltage							
30	H	7-1/2	10	15	20	**DH361FRKA1480**	**DH361FRKA2480**
60	H	20	25	30	50	**DH362FRKA1480**	**DH362FRKA2480**
100	H	30	40	60	75	**DH363FRKA1480**	**DH363FRKA2480**
200	H	50	50	125	150	**DH364FRKA1480**	**DH364FRKA2480**
600 Vac Auxiliary Circuit Voltage							
30	H	7-1/2	10	15	20	**DH361FRKA1600**	**DH361FRKA2600**
60	H	20	25	30	50	**DH362FRKA1600**	**DH362FRKA2600**
100	H	30	40	60	75	**DH363FRKA1600**	**DH363FRKA2600**
200	H	50	50	125	150	**DH364FRKA1600**	**DH364FRKA2600**

Fusible 240 Vac—Three-Pole

Ampere Rating	Fuse Type Provision	Maximum Horsepower Ratings AC Standard Fuse Single-Phase	Standard Fuse Three-Phase	Time Delay Single-Phase	Time Delay Three-Phase	15A GFI Receptacle Catalog Number	20A GFI Receptacle Catalog Number
208 Vac Auxiliary Circuit Voltage							
30	H	—	—	—	—	**DH321NRKA1208**	**DH321NRKA2208**
60	H	—	—	—	—	**DH322NRKA1208**	**DH322NRKA2208**
100	H	—	—	—	—	**DH323NRKA1208**	**DH323NRKA2208**
200	H	—	—	—	—	**DH324NRKA1208**	**DH324NRKA2208**
240 Vac Auxiliary Circuit Voltage							
30	H	1-1/2	3	—	7-1/2	**DH321NRKA1240**	**DH321NRKA2240**
60	H	3	7-1/2	—	15	**DH322NRKA1240**	**DH322NRKA2240**
100	H	7-1/2	15	—	30	**DH323NRKA1240**	**DH323NRKA2240**
200	H	15	25	—	60	**DH324NRKA1240**	**DH324NRKA2240**

Supplied by Digital Stout Innovation & Trading FZE

Fusible 600 Vac—Three-Pole

Ampere Rating	Fuse Type Provision	Maximum Horsepower Ratings with Time Delay Fuses Single-Phase AC 480 V	Single-Phase AC 600 V	Three-Phase AC 480 V	Three-Phase AC 600 V	15A GFI Receptacle Catalog Number	20A GFI Receptacle Catalog Number
480 Vac Auxiliary Circuit Voltage							
30	H	7-1/2	10	15	20	**DH361NRKA1480**	**DH361NRKA2480**
60	H	20	25	30	50	**DH362NRKA1480**	**DH362NRKA2480**
100	H	30	40	60	75	**DH363NRKA1480**	**DH363NRKA2480**
200	H	50	50	125	150	**DH364NRKA1480**	**DH364NRKA2480**
600 Vac Auxiliary Circuit Voltage							
30	H	7-1/2	10	15	20	**DH361NRKA1600**	**DH361NRKA2600**
60	H	20	25	30	50	**DH362NRKA1600**	**DH362NRKA2600**
100	H	30	40	60	75	**DH363NRKA1600**	**DH363NRKA2600**
200	H	50	50	125	150	**DH364NRKA1600**	**DH364NRKA2600**

Note

Contact the Safety Switch Flex Center (**1-888-329-9272** or FlexSwitches@eaton.com) for additional options, including 20 A GFI receptacles.

Dimensions

Approximate Dimensions in Inches (mm)

Auxiliary Power Heavy-Duty Safety Switch

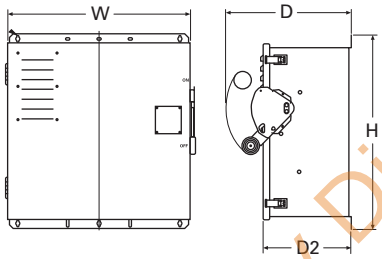

Ampere Rating	NEMA 3R Width (W)	Height (H)	Depth (D1)	Depth (D2)	Weight Lb (kg)
30	26.58 (675.1)	24.93 (633.2)	16.00 (406.4)	11.29 (286.8)	①
60	26.58 (675.1)	24.93 (633.2)	16.00 (406.4)	11.29 (286.8)	①
100	26.58 (675.1)	24.93 (633.2)	16.00 (406.4)	11.29 (286.8)	①

Note

① 108 lbs (49 kg) with a 15 A GFI receptacle; 130 lbs (59 kg) with a 20 A GFI receptacle.

Supplied by Digital Stout Innovation & Trading FZE

1

Left-Handed Safety Switch

Contents

Description	*Page*
Product Overview	**V2-T1-2**
General-Duty	**V2-T1-25**
Heavy-Duty	**V2-T1-30**
Heavy-Duty Double Door Safety Switch	**V2-T1-39**
Six-Pole Switches	**V2-T1-43**
Double-Throw Switches	**V2-T1-46**
EnviroLine Stainless Steel Switch	**V2-T1-53**
Window Switches	**V2-T1-57**
Receptacle Switches	**V2-T1-60**
Non-Metallic KRYDON Switch	**V2-T1-62**
Shunt Trip Safety Switch	**V2-T1-65**
NEMA 7/9—Hazardous Location Disconnect Switch	**V2-T1-68**
Quick-Connect Switches	**V2-T1-70**
Solar Disconnect Switch	**V2-T1-75**
Mill-Duty Rated, Heavy-Duty Safety Switch	**V2-T1-77**
Elevator Control Switch	**V2-T1-79**
Auxiliary Power Heavy-Duty Safety Switch	**V2-T1-82**
Left-Handed Safety Switch	
Heavy-Duty Surge Switch	**V2-T1-87**
OEM Line Isolation (OLI) Switch	**V2-T1-89**
Pringle Bolted Pressure Switch	**V2-T1-92**
Type DS, Fusible and Non-Fusible	**V2-T1-95**
Type Visi-Flex DE-ION	**V2-T1-98**
Flange Mounted—Variable Depth	**V2-T1-102**
Flange Mounted—Fixed Depth	**V2-T1-106**

Left-Handed Safety Switch

Product Description

These safety switches are designed with the operating handle and mechanism on the left side of the switch. This option provides flexibility for installation and an added layer of safety to allow the switch to be operated without standing in front of the door.

Features

- 30–200 A heavy-duty only
- Fusible and non-fusible
- NEMA 1, 3R, 12 and 4X
- Non-UL listed product
- Constructed with flange style handle (C361H1)
- No auxiliary contacts available

Note: Left-handed safety switches are supplied with a C361H1 handle.

Product Selection

Select the standard safety switch from the catalog and **add Suffix -00LH** to the catalog number.

Dimensions

Approximate Dimensions in Inches (mm)

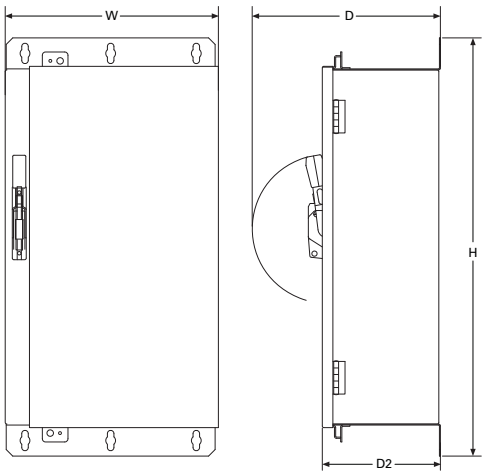

Left-Handed Safety Switch

Amperage	W	D	D2	H
30–100	12.00 (304.8)	9.05 (229.9)	9.05 (229.9)	22.30 (566.4)
	16.00 (406.4)	10.30 (261.6)	9.05 (229.9)	27.67 (702.8)

Supplied by Digital Stout Innovation & Trading FZE

Heavy-Duty Surge Switch

Contents

Description	*Page*
Product Overview	V2-T1-2
General-Duty	V2-T1-25
Heavy-Duty	V2-T1-30
Heavy-Duty Double Door Safety Switch	V2-T1-39
Six-Pole Switches	V2-T1-43
Double-Throw Switches	V2-T1-46
EnviroLine Stainless Steel Switch	V2-T1-53
Window Switches	V2-T1-57
Receptacle Switches	V2-T1-60
Non-Metallic KRYDON Switch	V2-T1-62
Shunt Trip Safety Switch	V2-T1-65
NEMA 7/9—Hazardous Location Disconnect Switch	V2-T1-68
Quick-Connect Switches	V2-T1-70
Solar Disconnect Switch	V2-T1-75
Mill-Duty Rated, Heavy-Duty Safety Switch	V2-T1-77
Elevator Control Switch	V2-T1-79
Auxiliary Power Heavy-Duty Safety Switch	V2-T1-82
Left-Handed Safety Switch	V2-T1-86
Heavy-Duty Surge Switch	
Catalog Number Selection	V2-T1-88
Dimensions	V2-T1-88
OEM Line Isolation (OLI) Switch	V2-T1-89
Pringle Bolted Pressure Switch	V2-T1-92
Type DS, Fusible and Non-Fusible	V2-T1-95
Type Visi-Flex DE-ION	V2-T1-98
Flange Mounted—Variable Depth	V2-T1-102
Flange Mounted—Fixed Depth	V2-T1-106

Heavy-Duty Surge Switch

Product Description

Eaton's Switching Device product line combined heavy-duty safety switches and Eaton's SP1 and CVX series surge protective devices (SPDs) to provide reliable, cost-effective surge protection. Integral to the switch, an SPD provides significantly better performance compared to a device that is externally mounted, resulting in better protection for connected equipment. Eaton's new packaged solution provides contractors and end users a UL listed product by connecting the SPD to the safety switch at the factory.

Features

- 30–1200A
- NEMA 12/3R or 4X 304-Grade stainless steel enclosures
- External window over switching base standard
- Window to view LEDs of SPD for quick status view
- Enhanced visible blades included
- Eaton Type SP1 and CVX surge protective devices available

Standards and Certifications

- UL 98, file no. E5239
- UL 1449 4th Edition, file no. E316410

Listed

Seismic Qualifications

- Heavy-duty switches exceed the requirements of Uniform Building Code (UBC) and California Code Title 24 OSP-0011-10, OSP-0012-10

For specific information on Eaton's SP1 and CVX surge protective devices, refer to product aids PA01005006E and PA01005002E.

Supplied by Digital Stout Innovation & Trading FZE

1

Catalog Number Selection

Heavy-Duty Surge Switch

DH 3 6 3 N D K __ W – CVXE

Switch Type
DH = Heavy-duty

Poles/Blades
2 = Two-pole
3 = Three-pole

Voltage
2 = 240 Vac
6 = 600 Vac

Amperes
1 = 30 A
2 = 60 A
3 = 100 A
4 = 200 A
5 = 400 A
6 = 600 A
7 = 800 A
8 = 1200 A ①

Fusible/Non-Fusible or Neutral
F = Fusible without neutral
N = Fusible with neutral
U = Non-fusible without neutral

NEMA Enclosure Ratings
D = NEMA 12/3R
W = NEMA 4X 304 stainless

Series
K = K switch

Non-Fusible Neutral
Blank = Fusible, or non-fusible without neutral
N = Non-fusible with neutral

Window
W = Viewing windows

SP1 Type Surge Device	CVX Type Surge Device
SP1A = SP1–240S (120/240 V single- or split-phase)	**CVXA** = CVX050–240S (120/240 V single- or split-phase)
SP1B = SP1–208Y (208/120 V, 3 PH, 4 W)	**CVXB** = CVX100–240S (120/240 V single- or split-phase)
SP1C = SP1–480Y (480/277 V, 3 PH, 4 W)	**CVXC** = CVX050–208Y (208/120 V, 3 PH, 4 W)
SP1D = SP1–600Y (600/347 V, 3 PH, 4 W)	**CVXD** = CVX100–208Y (208/120 V, 3 PH, 4 W)
SP1E = SP1–240D (240 V, 3 PH, 3 W Delta)	**CVXE** = CVX050–480Y (480/277 V, 3 PH, 4 W)
SP1F = SP1–480D (480 V, 3 PH, 3 W Delta)	**CVXF** = CVX100–480Y (480/277 V, 3 PH, 4 W)
SP1G = SP1–600D (600 V, 3 PH, 3 W Delta)	**CVXG** = CVX050–600Y (600/347 V, 3 PH, 4 W)
	CVXH = CVX100–600Y (600/347 V, 3 PH, 4 W)
	CVXI = CVX050–240D (240 V, 3 PH, 3 W)
	CVXJ = CVX100–240D (240 V, 3 PH, 3 W)
	CVXK = CVX050–480D (480 V, 3 PH, 3 W)
	CVXL = CVX100–480D (480 V, 3 PH, 3 W)
	CVXM = CVX050–600D (600 V, 3 PH, 3 W)
	CVXN = CVX100–600D (600 V, 3 PH, 3 W)
	CVXO = CVX050–240H (120/240 V, 3 PH high leg delta)
	CVXP = CVX100–240H (120/240 V, 3 PH high leg delta)

This table is intended for use in breaking down existing catalog numbers. It is not intended for building new catalog numbers.

Dimensions

Approximate Dimensions in Inches (mm)

Heavy-Duty Surge Switch

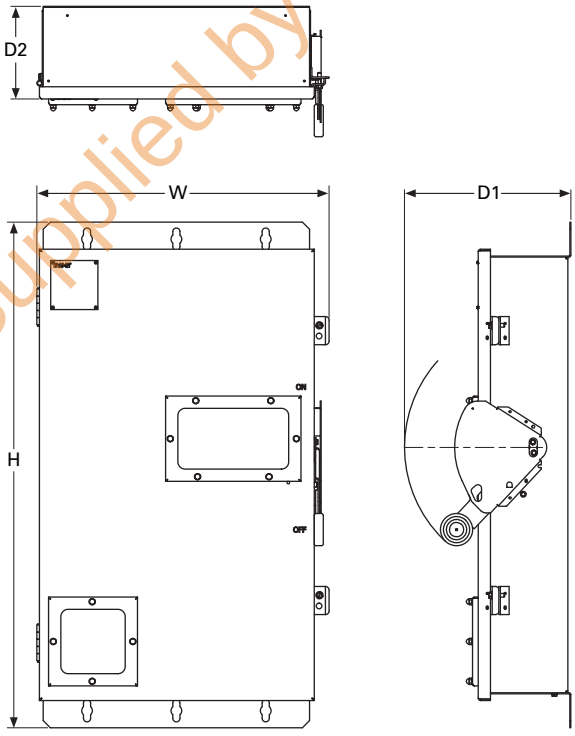

Heavy-Duty Surge Switch

Ampere Rating	Height (H)	Width (W)	Depth (D1)	Depth (D2)
30	25.02 (635.5)	15.00 (381.0)	10.31 (261.9)	5.62 (142.7)
60	25.02 (635.5)	15.00 (381.0)	10.31 (261.9)	5.62 (142.7)
100	25.02 (635.5)	15.00 (381.0)	10.31 (261.9)	5.62 (142.7)
200	35.37 (898.4)	20.44 (519.2)	11.66 (296.2)	6.48 (164.6)
400	57.47 (1459.7)	23.30 (591.8)	12.45 (316.2)	7.36 (186.9)
600	62.97 (1599.4)	24.30 (617.2)	14.08 (357.6)	8.98 (228.1)
800	71.72 (1821.7)	25.55 (649.0)	14.08 (357.6)	8.98 (228.1)
1200	73.77 (1873.8)	43.12 (1095.0)	19.20 (487.7)	12.46 (316.5)

Standard Lug Capacities

Ampere Rating	Minimum Wire Size	Maximum Wire Size	Wire Type
30	#14	#2	Cu/Al
60	#14	#2	Cu/Al
100	#14	#1/0	Cu/Al
200	#6	#300 kcmil	Cu/Al
400	(2) #1/0 (1) #1/0	(2) 300 kcmil (1) 750 kcmil	Cu/Al or Cu/Al
600	(1) #2 (1) #1/0	(1) 600 kcmil (1) 750 kcmil	Cu/Al and Cu/Al
800	(4) #1/0	(4) 750 kcmil	Cu/Al
1200	(4) #1/0	(4) 750 kcmil	Cu/Al

Note

① Available with SP1 type surge device only.

Supplied by Digital Stout Innovation & Trading FZE

OEM Line Isolation (OLI) Switch

Contents

Description	Page
Product Overview	V2-T1-2
General-Duty	V2-T1-25
Heavy-Duty	V2-T1-30
Heavy-Duty Double Door Safety Switch	V2-T1-39
Six-Pole Switches	V2-T1-43
Double-Throw Switches	V2-T1-46
EnviroLine Stainless Steel Switch	V2-T1-53
Window Switches	V2-T1-57
Receptacle Switches	V2-T1-60
Non-Metallic KRYDON Switch	V2-T1-62
Shunt Trip Safety Switch	V2-T1-65
NEMA 7/9—Hazardous Location Disconnect Switch	V2-T1-68
Quick-Connect Switches	V2-T1-70
Solar Disconnect Switch	V2-T1-75
Mill-Duty Rated, Heavy-Duty Safety Switch	V2-T1-77
Elevator Control Switch	V2-T1-79
Auxiliary Power Heavy-Duty Safety Switch	V2-T1-82
Left-Handed Safety Switch	V2-T1-86
Heavy-Duty Surge Switch	V2-T1-87
OEM Line Isolation (OLI) Switch	
Additional Features and Benefits	V2-T1-90
Catalog Number Selection	V2-T1-90
Modifications	V2-T1-90
Technical Data and Specifications	V2-T1-90
Pringle Bolted Pressure Switch	V2-T1-92
Type DS, Fusible and Non-Fusible	V2-T1-95
Type Visi-Flex DE-ION	V2-T1-98
Flange Mounted—Variable Depth	V2-T1-102
Flange Mounted—Fixed Depth	V2-T1-106

OEM Line Isolation (OLI) Switch

Product Description

Traditional control panels may expose operators to line side system voltage (i.e., 480 Vac) even when the internal main disconnect is in the OFF position. Many panel-building OEMs and OEM customers are concerned with arc flash hazards and arc flash categories and may be looking for ways to reduce them.

The solution is the OEM Line Isolation (OLI) switch—another product in Eaton's expanding offering of safer switching devices. The OLI switch provides an external disconnecting means for industrial control panels. It allows an operator to access the control panel without exposure to the line side voltage, thus enhancing safety and allowing for reduced PPE, which improves worker dexterity and mobility.

The OLI switch is designed to universally integrate to major manufacturers' "disconnect enclosures" that will work with the Eaton C371-style handle and operating mechanism. The Eaton solution is a complete package, including enclosure, disconnect, handle, flex-cable operator and all other necessary components.

Features

- 30–600 A
- NEMA 12/3R and NEMA 4X 304 stainless steel enclosures
- Oversized line shield (internal to switch)
- Optional voltage portal(s) and/or voltage tester
- Gasketed side wall mounts to OEM cabinet
- Voltage indicators for line, load or line and load of switch (optional)
- Mechanical interlock—cannot open switch or OEM cabinet when handle is in the ON position
- Flange handle (for mounting on OEM cabinet)
- Custom Flex Shaft™ operator modified to work with safety switch

Standards and Certifications

- UL/cUL
- UL 98 standard, file no. E222859
- UL 50 standard, file no. E478865

UL Listed

Supplied by Digital Stout Innovation & Trading FZE

1

Additional Features and Benefits

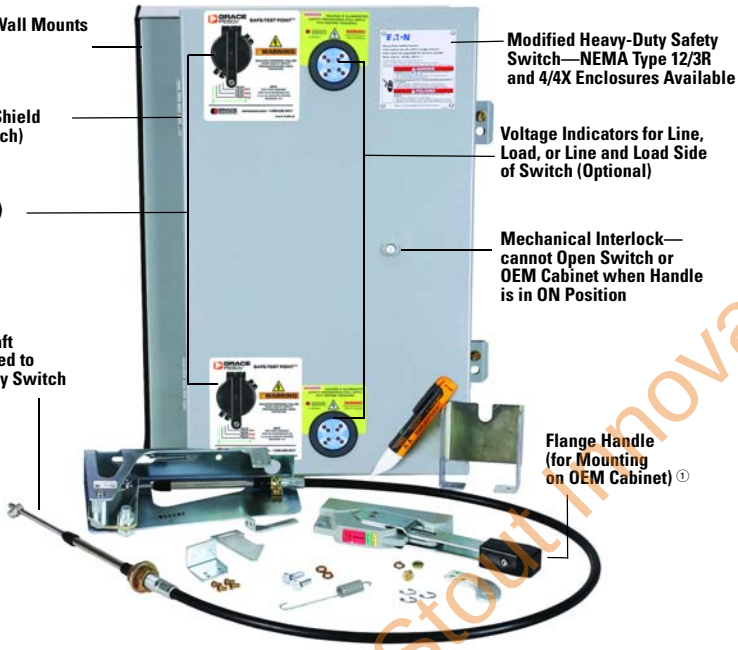

① Flex Shaft operator and handle assembly is included and shipped with switch loose, for field installation.

Catalog Number Selection

OEM Line Isolation (OLI) Switch

OLI 3 6 3 F D J B - 00VP

Switch type
OLI = OEM Line Isolation

Poles/Blades
2 = Two-pole
3 = Three-pole

Voltage
6 = 600 Vac max.

Ampere Rating
1 = 30 A
2 = 60 A
3 = 100 A
4 = 200 A
5 = 400 A
6 = 600 A

Fusible/Non-fusible
F = Fusible without neutral
U = Non-fusible without neutral

NEMA Enclosure
D = NEMA 12/3R
W = NEMA 4X stainless

Fuse Class Provisions
J = Class J
X = Non (non-fused)

Voltage Indicator Location
X = None
A = Load side
B = Line and load side
C = Line side

Options/Modifications ①
0000 = None
0002 = 1NO/1NC auxiliary
0003 = 2NO/2NC auxiliary
BLAK = Painted black
ORNG = Painted orange
0RED = Painted red
0316 = 316 stainless steel
00NP = Custom nameplate
000G = Additional grounding
00VP = Voltage portal ②
00VT = Voltage Safe-Test Point ②

Modifications

Additions are available such as custom paint, 316-stainless enclosures, custom OEM labeling and more. Call the Flex Center at 1-888-329-9272 for more information.

Notes

① More combinations and options are available.
② One voltage portal for each voltage indicator specified.

Supplied by Digital Stout Innovation & Trading FZE

Technical Data and Specifications

Ratings and Capacities

Ampere Rating	Short-Circuit Ratings (Amperes) Fusible (Class J)	Non-Fusible	Standard Lug Capacities Per Phase Min. Wire Size	Max. Wire Size	Wire Type	Ground Min. Wire Size	Max. Wire Size	Wire Type
30	200 k at 600 V	10 k at 600 V	#14	#2	Cu/Al	(2) #14	(2) 1/0	Cu/Al
60	200 k at 600 V	10 k at 600 V	#14	#2	Cu/Al	(2) #14	(2) 1/0	Cu/Al
100	200 k at 600 V	10 k at 600 V	#14	1/0	Cu/Al	(2) #14	(2) 1/0	Cu/Al
200	200 k at 600 V	10 k at 600 V	#6	300 kcmil	Cu/Al	(2) #14	(2) 1/0	Cu/Al
400	100 k at 600 V 200 k at 480 V	10 k at 600 V	(2) 1/0 (1) 1/0	(2) 300 kcmil or (1) 750 kcmil	Cu/Al	(2) #6	(2) 250 kcmil	Cu/Al
600	100 k at 600 V 200 k at 480 V	10 k at 600 V	(2) #2 (1) #1/0	(2) 300 kcmil and (1) 750 kcmil	Cu/Al	(2) #6	(2) 250 kcmil	Cu/Al

Dimensions

Approximate Dimensions in Inches (mm)

OEM Line Isolation (OLI) Switch

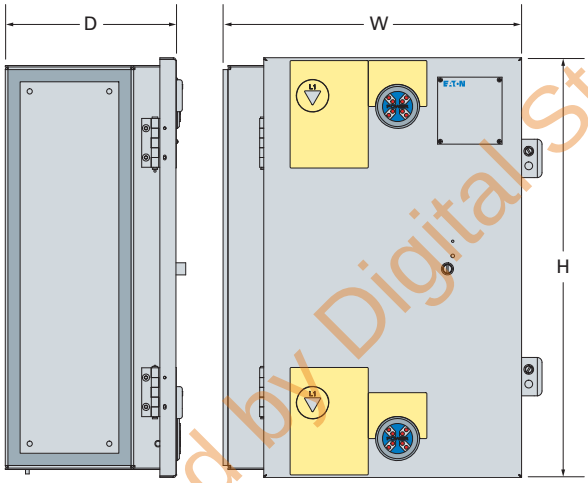

Switch Amperage	Height (H)	Width (W)	Depth (D)
30	21.49 (545.8)	16.08 (408.4)	9.24 (234.7)
60	21.49 (545.8)	16.08 (408.4)	9.24 (234.7)
100	28.21 (716.5)	18.30 (464.8)	9.24 (234.7)
200	28.21 (716.5)	18.30 (464.8)	9.24 (234.7)
400	50.15 (1273.8)	21.30 (541.0)	9.24 (234.7)
600	54.49 (1384.0)	21.30 (541.0)	12.14 (308.3)

Supplied by Digital Stout Innovation & Trading FZE

1

Pringle Bolted Pressure Switches

CBC Type Switch

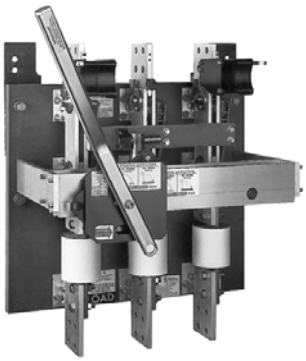

QA Type Switch

Contents

Description	*Page*
Product Overview	**V2-T1-2**
General-Duty	**V2-T1-25**
Heavy-Duty	**V2-T1-30**
Heavy-Duty Double Door Safety Switch	**V2-T1-39**
Six-Pole Switches	**V2-T1-43**
Double-Throw Switches	**V2-T1-46**
EnviroLine Stainless Steel Switch	**V2-T1-53**
Window Switches	**V2-T1-57**
Receptacle Switches	**V2-T1-60**
Non-Metallic KRYDON Switch	**V2-T1-62**
Shunt Trip Safety Switch	**V2-T1-65**
NEMA 7/9—Hazardous Location Disconnect Switch	**V2-T1-68**
Quick-Connect Switches	**V2-T1-70**
Solar Disconnect Switch	**V2-T1-75**
Mill-Duty Rated, Heavy-Duty Safety Switch	**V2-T1-77**
Elevator Control Switch	**V2-T1-79**
Auxiliary Power Heavy-Duty Safety Switch	**V2-T1-82**
Left-Handed Safety Switch	**V2-T1-86**
Heavy-Duty Surge Switch	**V2-T1-87**
OEM Line Isolation (OLI) Switch	**V2-T1-89**
Pringle Bolted Pressure Switch	
Catalog Number Selection	**V2-T1-93**
Product Selection	**V2-T1-94**
Type DS, Fusible and Non-Fusible	**V2-T1-95**
Type Visi-Flex DE-ION	**V2-T1-98**
Flange Mounted—Variable Depth	**V2-T1-102**
Flange Mounted—Fixed Depth	**V2-T1-106**

Supplied by Digital Stout Innovation & Trading FZE

Pringle Bolted Pressure Switch

Product Description

Eaton Pringle™ switches have helped pioneer development of high-quality electrical products for commercial and industrial applications since 1891. Eaton's commitment to engineering excellence and reputation for quality have made us a recolonized leader in the electrical industry, and today you'll find our electrical products in use throughout the U.S., Canada and most of the world's major markets. Eaton Pringle bolted contact switches are a worldwide standard in high-current switching applications. They are custom-built and used in many heavy-duty applications, and are suitable for use in UL 891 switchboards.

Bolted Pressure Contacts

All Pringle switches feature bolted pressure contacts. The result: blade contact surfaces are bolted closed at a pressure of 600 PSI—at both the hinge and jaw ends. The benefit: current conducting efficiency is the equivalent of a bolted bus bar connection.

Features

- 480 V UL
- 600 V CSA
- 800–4000 A
- 5000–6000 A (not UL listed)
- 200 kAIC and 100% rated with Class "L" fuses
- Top or bottom feed
- Two, three- or four-pole
- Optional blown fuse detection and protection
- Quick-positive switching action
- Manual or electrically operated mechanism
- 6X Make/12X Break contact rating
- Many options available, see following page

Spring Mechanism

All quick action switches use a unique spring mechanism for improved reliability over traditional coil springs. The unique spring design is created by a series of concave-convex washers. The paired-washer spring design provides a higher force/distance ratio, making it easier to operate the mechanism.

Should any pair of washers become inoperable for any reason, the entire spring assembly will still be operable by means of the remaining pairs. This is unlike the situation if a coil spring were to fracture or fatigue.

Sample Spring Configuration

Standards and Certifications

- 480 V UL
- 600 V CSA

Catalog Number Selection

Pringle Bolted Pressure Switch

CB 08 3 3 B 120 480 K G R AO CT 5 6 NF

Switch
CB = CBC
QA = QA
FP = FP

Amperes
08 = 800 A
12 = 1200 A
16 = 1600 A
20 = 2000 A
25 = 2500 A
30 = 3000 A
40 = 4000 A
50 = 5000 A ①
60 = 6000 A ①

Poles
2 = Two-pole
3 = Three-pole
4 = Four-pole

Wire
2 = Two-wire
3 = Three-wire
4 = Four-wire ②

Feed
B = Bottom
T = Top

Voltage Control ③
120 = 120 V ④

System Voltage
208 = 208 V ⑤
480 = 480 V
600 = 600 V

Interlock
D = Door interlock
K = Key interlock provisions
L = Both D and K above

Blown Fuse Detector (BFD)
A = BFD with three normally ON lights (does NOT trip)
AO = BFD with three normally OFF lights (does NOT trip)
AX = BFD with NO lights (trips switch)
A9 = BFD with three normally ON lights (trips switch)
AR = BFD with three normally OFF lights (trips switch)

Control Power Transformer ③
CT = With control power transformer ⑥

Phase Failure Relay ③
R = Single-phase voltage relay with capacitor trip device (SPVR) ⑧

Arc Energy Reduction / Ground Fault ③⑨
C = Arc energy reduction relay / ground fault combination relay
E = Arc energy reduction relay
G = Ground fault with control power transformer
GNX = Ground fault without control power transformer

Auxiliary Contact
5 = 1NO/1NC
7 = 2NO/2NC

Options
6 = With handle suitable to meet 6'6" requirements

Additional Option
NF = Non-fused ⑦

Pringle Mill Switch ⑩

(NEMA 1/3R/12 Enclosed)

PMS 08 3 3 NF T B W

Switch
PMS = Pringle Mill Switch

Amperes
08 = 800 A
12 = 1200 A
16 = 1600 A
20 = 2000 A
25 = 2500 A
30 = 3000 A
40 = 4000 A

Poles
2 = Two-pole ⑪
3 = Three-pole ⑫

Wire
2 = Two-wire ⑪
3 = Three-wire ⑫

Fusing
F = Fusible
NF = Non-fusible

Feed Entry
B = Bottom
T = Top

Feed Exit
B = Bottom
T = Top

Option ⑬
W = With viewing window

Notes
① Not UL listed.
② For CB switch type, four-wire indicates a wired neutral CT only. Neutral bar not included—must be provided by others.
③ Not an option with QA type switches.
④ 110 Vdc also available. Please contact the plant.
⑤ For QA switches, please use a 480 V system catalog number when referencing a 208 V system.
⑥ Only applicable if ordering a CPT only, without ground fault.
⑦ Only available with QA switches and in a top-feed configuration.
⑧ Includes control power transformer.
⑨ Switch with relay protection must use 120 V control voltage.
⑩ Does not carry UL listing.
⑪ 250 Vdc.
⑫ 480 Vac.
⑬ Additional available accessories/options—door interlock, special nameplates, custom dimensions, special paint and auxiliary contacts.

Supplied by Digital Stout Innovation & Trading FZE

1

Product Selection

Manually Operated (QA)—UL Listed

Manually operated contact switch with quick positive switching action. Can be top or bottom fed.

Electrical Trip (CBC)—UL Listed

Contact switch with charge-before-close mechanism. Can be manually or electrically tripped. Optional blown fuse detector and phase failure relay with capacitor trip available.

Fault Protector Electrical Trip (FP)—UL Listed

The FP combines the features of a CBC switch but includes an integrated zero-sequence sensor and ground fault.

Pringle Mill Switch (PMS)—Not UL Listed

Manually operated contact switch with quick-positive switching action. Comes in a NEMA 1/3R/12 enclosure with a side-operated mechanism. Can be fusible or non-fusible, two- or three-pole configurations.

Service

Eaton's Pringle switches are manufactured with precision-made parts and, like any mechanical device, they do require routine maintenance to operate at the optimal level. Over time, contact surfaces may be exposed to dirt and other contaminants, which could result in improper mechanical and/or electrical operation of the switch.

Eaton's Electrical Engineering Services & Systems team can perform planned maintenance and diagnose problems as well as respond to emergencies. Locate your local office by calling 1-800-498-2678 or visiting www.eaton.com/service and selecting the "Locate an Eaton Engineering office" link.

Aftermarket Parts

Eaton offers replacement components, as well as replacement switches. Aftermarket part information can be found in publication TD00808001E or by calling 1-877-ETN-CARE (1-877-386-2273).

Supplied by Digital Stout Innovation & Trading FZE

Contents

Description	Page
Product Overview	V2-T1-2
General-Duty	V2-T1-25
Heavy-Duty	V2-T1-30
Heavy-Duty Double Door Safety Switch	V2-T1-39
Six-Pole Switches	V2-T1-43
Double-Throw Switches	V2-T1-46
EnviroLine Stainless Steel Switch	V2-T1-53
Window Switches	V2-T1-57
Receptacle Switches	V2-T1-60
Non-Metallic KRYDON Switch	V2-T1-62
Shunt Trip Safety Switch	V2-T1-65
NEMA 7/9—Hazardous Location Disconnect Switch	V2-T1-68
Quick-Connect Switches	V2-T1-70
Solar Disconnect Switch	V2-T1-75
Mill-Duty Rated, Heavy-Duty Safety Switch	V2-T1-77
Elevator Control Switch	V2-T1-79
Auxiliary Power Heavy-Duty Safety Switch	V2-T1-82
Left-Handed Safety Switch	V2-T1-86
Heavy-Duty Surge Switch	V2-T1-87
OEM Line Isolation (OLI) Switch	V2-T1-89
Pringle Bolted Pressure Switch	V2-T1-92
Type DS, Fusible and Non-Fusible	
Product Selection	V2-T1-96
Options and Accessories	V2-T1-96
Technical Data and Specifications	V2-T1-97
Type Visi-Flex DE-ION	V2-T1-98
Flange Mounted—Variable Depth	V2-T1-102
Flange Mounted—Fixed Depth	V2-T1-106

Type DS, Fusible and Non-Fusible

Product Description

Type DS disconnect is a compact load break switch using the DE-ION arc-quenching principle and quick make/quick break over center toggle mechanism. It has visible contacts, is UL listed and is available either as a fusible or non-fusible switch.

Note: Switches through 200 A are UL listed as miscellaneous switches; 400 and 600 A switches are recognized under the component program of Underwriters Laboratories.

Application Description

Maximum switch-fuse application based on short-circuit current withstand (symmetrical amperes).

Short-Circuit Ratings

Switch Rating Amperes	Maximum Application at 240, 480 or 600 Vac	
	Class R Fuses	Current Limiting Fuse Class J
30	200,000	200,000
60	200,000	200,000
100	200,000	200,000
400	100,000 ①	200,000
600	100,000 ①	200,000

Note

① 480V maximum.

Standards and Certifications

- UL 98
- CSA (see table on **Page V2-T1-96**)

Supported by Digital Stout Innovation & Trading FZE

1

Product Selection

DS Type Switch

Switch Ordering Information

Switch Rating	Fuse Clip Rating Ampere	Type Volts ①	Catalog Number ②③
30	No fuse ④	—	**DS16U**
30	30	NEC 250	**DS121R**
30	30	NEC 600	**DS161R**
30	60	NEC 250	**DS122**
30	60	NEC 600	**DS162**
60	No fuse ④	—	**DS26U**
60	60	NEC 250	**DS222R**
60	60	NEC 600	**DS262R**
60	100	NEC 250/600	**DS263**
100	No fuse ④	—	**DS36U**
100	100	NEC 250/600	**DS363R**
100 ⑤	200	NEC 250/600	**DS364**
400	No fuse ④	—	**DS56U**
400	400	NEC 250/600	**DS565R**
600	No fuse ④	—	**DS66U**
600	600	NEC 250/600	**DS666R**

Options and Accessories

Base Mounting Hardware

Note: Order separately when required. No charge when ordered with switch.

Base Mounting Hardware

Description	Catalog Number
30, 60, 100 A non-fusible	**624B375G17**
30, 60, 100 A fusible	**624B375G17**
400 or 600 A non-fusible	**673B125G04**
400 or 600 A Fusible	**673B125G05**

Auxiliary Switch Kits

Note: Permits field mounting of an auxiliary switch for separate control circuit applications. Each switch includes three soldered, identified leads. Rated 250 V maximum.

Auxiliary Switch Kits

Switch Used With	Contact Arrangement	Kit Catalog Number
30, 60, 100 A	1A-1B	**178C265G05**
30, 60, 100 A	2As-2Bs	**178C265G06**

Class R Fuse Clip Conversion Kits for Type DS Switches

Switch Rating Amperes	Volts	Kit Catalog Number
30	250	**RFK121**
30	600	**RFK161**
60	250	**RFK222**
60	600	**RFK262**
100	250/600	**RFK464**
400	250/600	**RFK666**
600	250/600	**RFK666**

Notes

① 600 V ratings are suitable for Class J fuses.
② Switches with Catalog Number Suffix **R** are UL listed for use with Class R fuses when fuse clip conversion kits shown on this page are used.
③ Switches with Catalog Number Suffix **R** or **U** are CSA listed.
④ Rated 600 V.
⑤ Supplied as unfused switch with separate fuse blocks.

Supplied by Digital Stout Innovation & Trading FZE

Technical Data and Specifications

Maximum Horsepower

Type Switch	Maximum Horsepower Ratings 120 Vac Standard	Time Delay	240 Vac Standard	Time Delay	480 Vac Standard	Time Delay	600 Vac Standard	Time Delay	250 Vdc
DS16U	5	—	10	—	20	—	25	—	7-1/2
DS121R	1-1/2	3	3	7-1/2	—	—	—	—	5
DS122	3	—	7-1/2	—	—	—	—	—	5
DS161R	—	—	—	—	5	15	7-1/2	20	5
DS162	—	—	—	—	15	—	15	—	5
DS26U	10	—	20	—	40	—	60	—	15
DS222R	3	7-1/2	7-1/2	15	—	—	—	—	10
DS262R	—	—	—	—	15	30	15	50	10
DS263	—	—	15	—	25	—	30	—	10
DS36U	15	—	30	—	75	—	75	—	25
DS363R	—	—	15	30	25	60	30	75	20
DS364	—	—	25	—	50	—	60	—	20
DS56U	—	—	100	—	250	—	350	—	—
DS565R	—	—	50	100	100	250	125	350	—
DS66U	—	—	100	—	400	—	500	—	—
DS666R	—	—	75	100	150	400	200	500	—

Terminal Data

Switch Rating	Wire Range Copper	Aluminum
30	#14–#2	#12–#2
60	#14–#2	#12–#2
100	#14–1/0	#12–1/0
400	(1) #4–600 kcmil or (2) 1/0–3/0	(1) #4–600 kcmil or (2) 1/0–250 kcmil
600	Same as 400 A except two terminals per pole	—

Note

Terminals are suitable for either copper or aluminum cable.

Supplied by Digital Stout Innovation & Trading FZE

1

Type Visi-Flex DE-ION

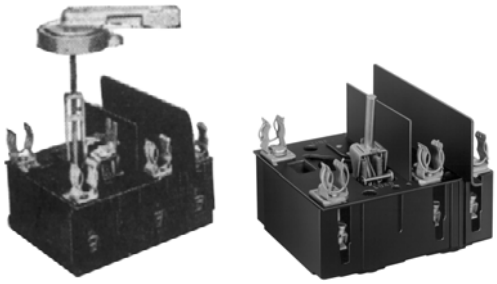

Contents

Description	*Page*
Product Overview	**V2-T1-2**
General-Duty	**V2-T1-25**
Heavy-Duty	**V2-T1-30**
Heavy-Duty Double Door Safety Switch	**V2-T1-39**
Six-Pole Switches	**V2-T1-43**
Double-Throw Switches	**V2-T1-46**
EnviroLine Stainless Steel Switch	**V2-T1-53**
Window Switches	**V2-T1-57**
Receptacle Switches	**V2-T1-60**
Non-Metallic KRYDON Switch	**V2-T1-62**
Shunt Trip Safety Switch	**V2-T1-65**
NEMA 7/9—Hazardous Location Disconnect Switch	**V2-T1-68**
Quick-Connect Switches	**V2-T1-70**
Solar Disconnect Switch	**V2-T1-75**
Mill-Duty Rated, Heavy-Duty Safety Switch	**V2-T1-77**
Elevator Control Switch	**V2-T1-79**
Auxiliary Power Heavy-Duty Safety Switch	**V2-T1-82**
Left-Handed Safety Switch	**V2-T1-86**
Heavy-Duty Surge Switch	**V2-T1-87**
OEM Line Isolation (OLI) Switch	**V2-T1-89**
Pringle Bolted Pressure Switch	**V2-T1-92**
Type DS, Fusible and Non-Fusible	**V2-T1-95**
Type Visi-Flex DE-ION	
Product Selection	**V2-T1-99**
Options and Accessories	**V2-T1-100**
Technical Data and Specifications	**V2-T1-101**
Flange Mounted—Variable Depth	**V2-T1-102**
Flange Mounted—Fixed Depth	**V2-T1-106**

Type Visi-Flex DE-ION

Product Description

Complete Model A switch styles with fuse or non-fuse kits mounted are UL listed. Refer to "Electrical Construction Materials List," miscellaneous switches. Switches only, no fuse, fuse clip kit and all Model T switches are recognized under the component program of Underwriters Laboratories. The external operating handle of Model A can be padlocked in the OFF position with up to three padlocks.

Standards and Certifications

- UL 98

Terminal Data

- 30, Spec. 60 A switches: #14–#4 Cu cable only
- 60, 100 A switches #14–1/0 Cu cable only

Supplied by Digital Stout Innovation & Trading FZE

Product Selection

Switch Ordering Information

Model A

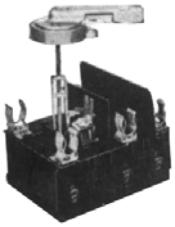

Model T

Continuous Ampere Rating	Fuse or No-Fuse Kit (see photos on Page V2-T1-100)	Model A, Adjustable Depth Complete Unit Catalog Number ①	Model A, Adjustable Depth Switch Only ② Catalog Number (see handle and shaft below, fuse kit at right)	Model T, Toggle Operated Switch Only ③ Catalog Number (see fuse kit at right)	Fuse Clip Kits for Model A or T NEC and Standard Time Delay ④⑤ (No-Fuse Kit—See Below) Clips for Class K or H Fuses Catalog Number	Clips for Class R Fuses Only Catalog Number
30	No fuse ⑦	**2607D89G01**	**2607D63G02**	**371D392G02**	—	—
	30 A/250 V	**2607D89G02**	**2607D63G01**	**371D392G01**	**313C590G08**	**1226C94G01**
	60 A/250 V	**2607D89G03**	**2607D63G01**	**371D392G01**	**313C590G09**	**1226C94G03**
	100 A/250 V	**2607D89G04**	**2607D63G01**	**371D392G01**	**313C590G13**	**1226C94G05**
	30 A/600 V	**2607D89G05**	**2607D63G01**	**371D392G01**	**313C590G10**	**1226C94G02**
	60 A/600 V	**2607D89G06**	**2607D63G01**	**371D392G01**	**313C590G11**	**1226C94G04**
Special 60 ⑥	No fuse ⑦	**2607D89G07**	**2607D63G06**	**371D392G06**	—	—
	30 A/250 V	**2607D89G08**	**2607D63G05**	**371D392G05**	**313C590G08**	**1226C94G01**
	60 A/250 V	**2607D89G09**	**2607D63G05**	**371D392G05**	**313C590G09**	**1226C94G03**
	100 A/250 V	**2607D89G10**	**2607D63G05**	**371D392G05**	**313C590G13**	**1226C94G05**
	30 A/600 V	**2607D89G11**	**2607D63G05**	**371D392G05**	**313C590G10**	**1226C94G02**
	60 A/600 V	**2607D89G12**	**2607D63G05**	**371D392G05**	**313C590G11**	**1226C94G04**
60 ⑥	No fuse ⑦	**2607D90G01**	**2607D66G14**	**657D780G12**	—	—
	30 A/250 V	**2607D90G02**	**2607D66G13**	**657D780G11**	**177C880G23**	**1226C94G06**
	60 A/250 V	**2607D90G03**	**2607D66G13**	**657D780G11**	**177C880G12**	**1226C94G08**
	100 A/250 V	**2607D90G04**	**2607D66G13**	**657D780G11**	**177C880G13**	**1226C94G10**
	200 A/250 V	**2607D90G05**	**2607D66G13**	**657D780G11**	**177C880G14**	—
	30 A/600 V	**2607D90G06**	**2607D66G13**	**657D780G11**	**177C880G24**	**1226C94G07**
	60 A/600 V	**2607D90G07**	**2607D66G13**	**657D780G11**	**177C880G15**	**1226C94G09**
	100 A/600 V	**2607D90G08**	**2607D66G13**	**657D780G11**	**177C880G16**	**1226C94G11**
100	No fuse ⑦	**2607D91G07**	**2607D66G18**	**657D780G16**	—	—
	60 A/250 V	**2607D91G08**	**2607D66G17**	—	**177C880G12**	**1226C94G08**
	100 A/250 V	**2607D91G09**	**2607D66G17**	**657D780G15**	**177C880G13**	**1226C94G10**
	20 A/250 V	**2607D91G10**	**2607D66G17**	**657D780G15**	**177C880G14**	—
	60 A/600 V	**2607D91G11**	**2607D66G17**	—	**177C880G15**	**1226C94G09**
	100 A/600 V	**2607D91G12**	**2607D66G17**	**657D780G15**	**177C880G16**	**1226C94G11**
	200 A/600 V	**2607D91G13**	**2607D66G17**	**657D780G15**	**177C880G18**	—

Notes

① Model A shipped as basic switch, operating handle, shaft and fuse or no-fuse kit. Model T shipped as basic switch and fuse or no-fuse kit.
② External operating handle, shaft and fuse or no-fuse kit required.
③ Fuse or no-fuse kit required.
④ Includes fuse clips and Micarta barriers.
⑤ Will also accept non-rejection type current limiting fuses:
Bussmann: 15–60 A type KTN and KTS (ferrule type), 65–200 A type KTN and KTS (blade type)
Chase Shawmut: 15–60 A type 1 (ferrule type), 65–200 A type 3 (blade type)
Federal Pacific Electric®: 15–200 A types NCL and SCL
⑥ Special 60 A switch has same dimension as 30 A Visi-Flex switch. Standard 60 A switch has same dimension as 100 A Visi-Flex switch.
⑦ Rated 600 V.

Supplied by Digital Stout Innovation & Trading FZE

1

Special Switches and Fuse Clips

Visi-Flex Switches with Auxiliary Switch Internally Mounted

Note: Basic switch only. Also order no-fuse kit, fuse kit, operating handle and shaft as required.

Ampere Rating	Catalog Number (for use without fuses)	Catalog Number (for use with fuses)
Model A		
30	**2607D63G04**	**2607D63G03**
Special 60	**2607D63G08**	**2607D63G07**
60	**2607D66G16**	**2607D66G15**
100	**2607D66G20**	**2607D66G19**
Model T		
30	**371D392G04**	**371D392G03**
Special 60	**371D392G08**	**371D392G07**
60	**657D780G14**	**657D780G13**
100	**657D780G18**	**657D780G17**

Special Fuse Kits

Fuse Clip Kit

No Fuse Kit

Current Limiting, Class J

Note: For Model A and/or T switches. Order in place of standard fuse clips.

Switch Type, Rating	Fuse Kit Rating	Catalog Number
Model A		
30	30 A/600 V	**503C690G01**
Special 60	60 A/600 V	**503C690G02**
	100 A/600 V	**503C690G03**
60	30 A/600 V	**503C690G15**
100	60 A/600 V	**503C690G16**
	100 A/600 V	**503C690G17**
	200 A/600 V	**503C690G18**
Model T		
30	30 A/600 V	**503C690G04**
Special 60	60 A/600 V	**503C690G05**
	100 A/600 V	**503C690G06**
60	30 A/600 V	**503C690G19**
100	60 A/600 V	**503C690G20**
	100 A/600 V	**503C690G21**
	200 A/600 V	**503C690G22**

Options and Accessories

Fuse Kits and Shaft

Description	Catalog Number
No fuse kits (for Models A or T)	
30, special 60 A switches	**313C590G14**
60, 100 A switches	**313C363G11**
Model A external operating handle	**504C323G07**
Model A Standard Shaft	
30, special 60 A switches	**2607D64G01** ①
60, 100 A switches	**2607D65G01** ②

Auxiliary Switch Kits for Model A and T Switches

Note: Permits field mounting of an auxiliary switch for separate control circuit applications. Provides an SPDT switch with 1A and/or 1B contacts. Includes three identified 18-inch soldered leads.

For Use With	Complete Kit Catalog Number
30 and special 60 A switch	**315C293G01** ③
60 and 100 A switch	**315C293G01** ③

Extra Long Vari-Depth Shaft for Model A Switches

Note: Order in place of standard shaft when required.

Switch Ampere Rating	Panel Depth in Inches (mm) Long Shaft	Catalog Number
30	8.19–13.06 (208.0–331.7) ④	**2607D65G02**
Special 60	8.19–13.06 (208.0–331.7) ④	**2607D65G02**
60	9.41–14.3 (239.0–358.9)	**2607D65G02**
100	9.41–14.3 (239.0–358.9)	**2607D65G02**

Notes

① For use with panels 5.06–8.19 inches (128.5–208.0 mm) deep.
② For use with panels 5.19–9.97 inches (131.8–253.2 mm) deep.
③ Order Instruction Sheet 12641.
④ For panel depth of 8.19–9.94 inches (208.0–252.5 mm), a minimum of 1.75 inch must be cut from bottom of shaft.

Supplied by Digital Stout Innovation & Trading FZE

Technical Data and Specifications

Maximum Horsepower Ratings

Fuse Clip Ratings	Maximum Horsepower Ratings 120 Vac Standard	Time Delay	240 Vac Standard	Time Delay	480 Vac Standard	Time Delay	600 Vac Standard	Time Delay	250 Vdc
30 A Switch									
Unfused	3	—	7-1/2	—	20	—	25	—	5
30 A/250 V	1-1/2	3	3	7-1/2	—	—	—	—	5
60 A/250 V	3	—	5	—	—	—	—	—	5
100 A/250 V	3	—	5	—	—	—	—	—	5
30 A/600 V	—	—	—	—	5	15	7-1/2	20	5
60 A/600 V	—	—	—	—	15	—	20	—	5
6 0A Switch (and Special 60 Ampere Switch)									
Unfused	7-1/2	—	20	—	40	—	50	—	10
30 A/250 V	1-1/2	3	3	7-1/2	—	—	—	—	5
60 A/250 V	3	7-1/2	7-1/2	15	—	—	—	—	10
100 A/250 V	—	—	15	—	—	—	—	—	10
200 A/250 V ①	—	—	15	—	—	—	—	—	—
30 A/600 V	—	—	—	—	5	15	7-1/2	20	5
60 A/600 V	—	—	—	—	15	30	15	50	10
100 A/600 V ①	—	—	15	—	25	30	30	50	10
100 A Switch									
Unfused	15	—	30	—	60	—	75	—	20
30 A/250 V	1-1/2	3	3	7-1/2	—	—	—	—	5
60 A/250 V	3	7-1/2	7-1/2	15	—	—	—	—	10
100 A/250 V	15	15	15	30	—	—	—	—	20
200 A/250 V	15	15	15	30	—	—	—	—	20
30 A/600 V	—	—	—	—	5	15	7-1/2	20	—
60 A/600 V	—	—	—	—	15	30	15	50	—
100 A/600 V	—	—	—	—	25	60	30	75	—
200 A/600 V	—	—	—	—	25	60	30	75	—

Note

① Does not apply to special 60 A switch since these fuse clips cannot be added.

Supplied by Digital Stout Innovation & Trading FZE

1

Complete Operating Mechanism—C361NE1

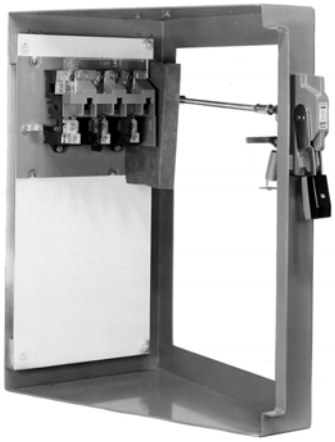

Contents

Description	Page
Product Overview	V2-T1-2
General-Duty	V2-T1-25
Heavy-Duty	V2-T1-30
Heavy-Duty Double Door Safety Switch	V2-T1-39
Six-Pole Switches	V2-T1-43
Double-Throw Switches	V2-T1-46
EnviroLine Stainless Steel Switch	V2-T1-53
Window Switches	V2-T1-57
Receptacle Switches	V2-T1-60
Non-Metallic KRYDON Switch	V2-T1-62
Shunt Trip Safety Switch	V2-T1-65
NEMA 7/9—Hazardous Location Disconnect Switch	V2-T1-68
Quick-Connect Switches	V2-T1-70
Solar Disconnect Switch	V2-T1-75
Mill-Duty Rated, Heavy-Duty Safety Switch	V2-T1-77
Elevator Control Switch	V2-T1-79
Auxiliary Power Heavy-Duty Safety Switch	V2-T1-82
Left-Handed Safety Switch	V2-T1-86
Heavy-Duty Surge Switch	V2-T1-87
OEM Line Isolation (OLI) Switch	V2-T1-89
Pringle Bolted Pressure Switch	V2-T1-92
Type DS, Fusible and Non-Fusible	V2-T1-95
Type Visi-Flex DE-ION	V2-T1-98
Flange Mounted—Variable Depth	
Product Selection	V2-T1-103
Accessories	V2-T1-104
Dimensions	V2-T1-105
Flange Mounted—Fixed Depth	V2-T1-106

Flange Mounted—Variable Depth

Product Description

Type C361 disconnect switches are suitable for installation in control enclosures having a right-hand flange. Fusible disconnect switches will accept R fuses as standard. Field installable rejection kits are supplied as standard on 100 and 200 A clips. For 30 and 60 A rejection clips, see footnote ④ on next page. The switch is UL component recognized for use on systems with up to 200,000 rms symmetrical amperes available fault current when Class R clips are supplied.

Standards and Certifications

- UL—Component File E55492
- CSA—LR353-439

Supplied by Digital Stout Innovation & Trading FZE

Product Selection

C361NE1

Operating Mechanism Variable Depth with Disconnect Switch—Right-Hand Mounting

Disconnect Switch Size (Amperes)	Variable Depth Mtg. Range Min./Max. (Inches) ①	Maximum Horsepower Ratings ② AC System Volts (Motor Volts) 208 (200)	240 (230)	480 (460)	600 (575)	DC Using Two Poles 250 V Max.	Fuse Clip Rating (Amperes) Non-Interchangeable Type for Class H, J, K or R Type Fuses Only 250 V	600 V	Switch and Operating Mechanism Only DOES NOT Include Handle Catalog Number	Switch and Operating Mechanism with 4-Inch Handle ③ For NEMA 1 or 12 Enclosure Catalog Number	For NEMA 4 Enclosure Catalog Number
30	7 to 16	7-1/2	7-1/2	15	20	5	Non-fusible		**C361NC**	**C361NC1**	**C361NC2**
							30	—	**C361SC21**	**C361SC121** ④	**C361SC221** ④
							60	30	**C361SC61**	**C361SC161** ④	**C361SC261** ④
60	7 to 16	15	15	30	50	10	Non-fusible		**C361ND**	**C361ND1**	**C361ND2**
							60	30	**C361SD22**	**C361SD122** ④	**C361SD222** ④
							—	60	**C361SD62**	**C361SD162** ④	**C361SD262** ④
100	7 to 16	25	30	60	75	20	Non-fusible		**C361NE**	**C361NE1**	**C361NE2**
							100	100	**C361SE263**	**C361SE1263**	**C361SE2263**
200	7 to 16	40	60	125	150	40	Non-fusible		**C361NF1**	**C361NF1**	**C361NF2**
							200	200	**C361SF264**	**C361SF1264**	**C361SF2264**

C361H1

Handle Only

Application	Operating Handle Length in Inches (mm)	NEMA Type Enclosure	Catalog Number
For use with 30, 60 100 and 200 A disconnect switches	4.00 (101.6)	1-12	**C361H1**
	4.00 (101.6)	4	**C361H2**
	6.00 (152.4)	1-12	**C361H3**
	6.00 (152.4)	4	**C361H4**

Notes

① Dimension shown is from panel to flange surface.
② Refers to rating of switch only.
③ Components individually boxed and shipped in overpack carton.
④ For rejection clips, add Suffix Letter **R** to listed Catalog Number. Example: C361SC121**R**.

Supplied by Digital Stout Innovation & Trading FZE

1

Accessories

Type C361 NEMA 12 Safety Door Hardware

Type C361 door hardware kits are designed to function with all C361 and C371 disconnect switches and circuit breaker operating mechanisms.

These kits are designed for use with small enclosures up to 40 inches (1016 mm), intermediate 40–60 inches (1016–1524 mm) or larger floor cases over 60 inches (1524 mm) to provide enclosure sealing and protection against unauthorized entry.

These kits can be used on enclosure flanges with material thickness ranging from 16 gauge through 3/16 inches with flanges on the right side only. Door hardware kits are to be installed in a commercially available enclosure. Consult the enclosure manufacturer application data for proper kit selection.

NEMA 12 Safety Door Hardware

Type C361 NEMA 12 Safety Door Hardware

Handle Length (Inches)	Catalog Number ①
4	**C361KJ4**
6	**C361KJ6**
Roller Latch ②	**C361KR**

Interlocks and Connecting Rod

Electrical Interlocks

Circuit	Catalog Number
1NO-1NC	**DS200EK1**
2NO-2NC	**DS200EK2**

Connecting Rods—Increase Maximum Allowable Depth by 5 Inches

Application	Catalog Number
Disconnect switches 30, 60, 100 and 200 A Circuit breakers 150, 250 and 400 A	**C371CS1**
Circuit breakers 600, 800 and 1200 A	**C371CS2**

Notes

① The 1/4-inch x 1/2-inch standard mill rectangular locking bar is not supplied with these kits.
② Third roller latch for use with 4 or 6-inch handle when three-point latching is required.

Supplied by Digital Stout Innovation & Trading FZE

Dimensions

Approximate Dimensions in Inches (mm)

Mounting Dimension Requirements in Inches (mm)

Disconnect Switch Type	A	B	C	D	E	F	G
30 A and 60 A non-fusible	See dimensions below	See dimensions below	1.56 (39.6)	0.96 (24.4)	4.00 (101.6)	3.50 (88.9)	7.12 (180.8)
30 A and 60 A fusible			1.56 (39.6)	0.96 (24.4)	4.00 (101.6)	3.50 (88.9)	9.75 (247.7)
100 A non-fusible			1.75 (44.5)	1.10 (27.9)	5.50 (139.7)	3.38 (85.9)	7.12 (180.8)
100 A fusible			1.75 (44.5)	1.10 (27.9)	5.50 (139.7)	3.38 (85.9)	11.88 (301.8)
200 A non-fusible and fusible			3.34 (84.8)	0.63 (16.0)	8.50 (215.9)	1.84 (46.7)	15.50 (393.7)

Mounting Dimension Requirements

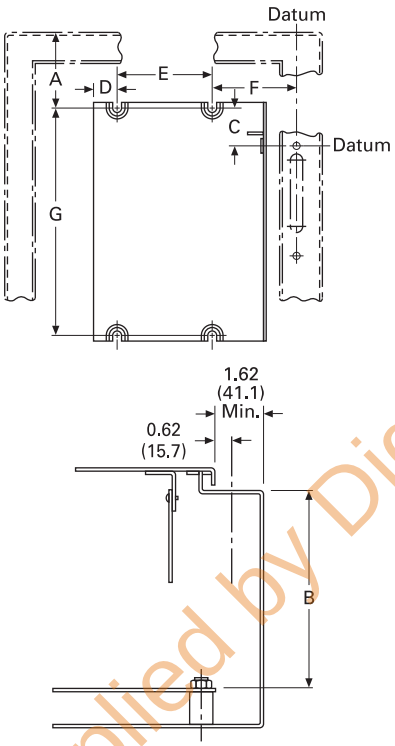

Line Lug Data

Disconnect Switch Size	Wire Size
30 A	#2–14 Cu/Al
60 A	#2–14 Cu/Al
100 A	1/0–14 Cu/Al
200 A	250 kcmil–#6 Cu/Al

Dimension A = The required wire bending spacing selected from Article 430.10 of the National Electrical Code.

Dimension B = Minimum or maximum depth from inside of flange holding operating handle to panel where disconnect switch is mounted (variable 7 to 16 inches).

Supplied by Digital Stout Innovation & Trading FZE

1

Fixed Depth Application

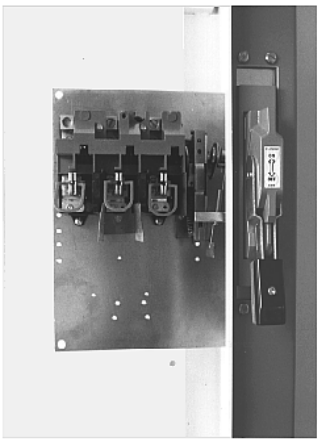

Contents

Description	Page
Product Overview	V2-T1-2
General-Duty	V2-T1-25
Heavy-Duty	V2-T1-30
Heavy-Duty Double Door Safety Switch	V2-T1-39
Six-Pole Switches	V2-T1-43
Double-Throw Switches	V2-T1-46
EnviroLine Stainless Steel Switch	V2-T1-53
Window Switches	V2-T1-57
Receptacle Switches	V2-T1-60
Non-Metallic KRYDON Switch	V2-T1-62
Shunt Trip Safety Switch	V2-T1-65
NEMA 7/9—Hazardous Location Disconnect Switch	V2-T1-68
Quick-Connect Switches	V2-T1-70
Solar Disconnect Switch	V2-T1-75
Mill-Duty Rated, Heavy-Duty Safety Switch	V2-T1-77
Elevator Control Switch	V2-T1-79
Auxiliary Power Heavy-Duty Safety Switch	V2-T1-82
Left-Handed Safety Switch	V2-T1-86
Heavy-Duty Surge Switch	V2-T1-87
OEM Line Isolation (OLI) Switch	V2-T1-89
Pringle Bolted Pressure Switch	V2-T1-92
Type DS, Fusible and Non-Fusible	V2-T1-95
Type Visi-Flex DE-ION	V2-T1-98
Flange Mounted—Variable Depth	V2-T1-102
Flange Mounted—Fixed Depth	
Accessories	V2-T1-107
Technical Data and Specifications	V2-T1-107
Dimensions	V2-T1-107

Flange Mounted—Fixed Depth

Product Description

Type C361 disconnect switches are suitable for installation in control enclosures having a right-hand flange. Fusible disconnect switches will accept R fuses as standard. Field installable rejection kits are supplied as standard on 100 and 200 A clips. For 30 and 60 A rejection clips, see **Page V2-T1-103**. The switch is UL component recognized for use on systems for use on systems with up to 200,000 rms symmetrical amperes available fault current when Class R clips are supplied.

- Minimum depth—flange to panel
  - 30–60A: 6.50 inches
  - 100A: 7 inches

Product Selection

Fixed Depth Application

Operating Mechanism Fixed Depth with Disconnect Switch—Right-Hand Mounting

Disconnect Switch Size (Amperes)	Maximum Horsepower Ratings ① AC System Volts (Motor Volts) 208 (200)	240 (230)	480 (460)	600 (575)	DC Using Two Poles 250V Maximum	Fuse Clip Rating (Amperes) Non-Interchangeable Type for Class H, J, K or R Type Fuses Only 250 V	600 V	Switch and Operating Mechanism with 4-Inch Handle For NEMA 1 or 12 Enclosure Catalog Number
30	7-1/2	7-1/2	15	20	5	Non-fusible		**C361FNC1**
						30	—	**C361FSC121** ②
						60	30	**C361FSC161** ②
60	15	15	30	50	10	Non-fusible		**C361FND1**
						60	30	**C361FSD122** ②
						—	60	**C361FSD162** ②
100	25	30	60	75	20	Non-fusible		**C361FNE1**
						100	100	**C361FSE1263**

Notes

① Refers to rating of switch only.

② For Rejection Clips, add Suffix Letter **R** to listed Catalog Number. Example: C361FSC121**R**.

Supplied by Digital Stout Innovation & Trading FZE

Accessories

Electrical Interlocks

Circuit	Catalog Number
1NO-1NC	**DS200EK1**
2NO-2NC	**DS200EK2**

Technical Data and Specifications

Line Lug Data

Disconnect Switch Size	Wire Size
30 A	#2–14 Cu/Al
60 A	#2–14 Cu/Al
100 A	1/0–14 Cu/Al
200 A	250 kcmil–#6 Cu/Al

Dimensions

Approximate Dimensions in Inches (mm)

Frame Size

Description	A	B	C	D	E
30–60 A disconnect switch	8.63 (219.2)	11.38 (289.1)	6.50 (165.1)	1.50 (38.1)	9.50 (241.3)
150 A circuit breaker	8.63 (219.2)	11.38 (289.1)	6.50 (165.1)	1.50 (38.1)	9.50 (241.3)
100 A disconnect switch	9.88 (251.0)	13.38 (339.9)	7.00 (177.8)	1.25 (31.8)	11.75 (298.5)
250 A circuit breaker	9.88 (251.0)	13.38 (339.9)	7.00 (177.8)	1.25 (31.8)	11.75 (298.5)
400 A circuit breaker	9.88 (251.0)	13.38 (339.9)	7.00 (177.8)	1.25 (31.8)	11.75 (298.5)

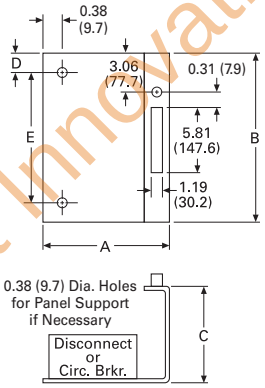

Supplied by Digital Stout Innovation & Trading FZE

Contents

Description	*Page*
Enclosed Circuit Breakers—Power Defense	
Features, Benefits and Functions	**V2-T1-109**
Standards and Certifications	**V2-T1-109**
Enclosed Circuit Breaker (ECB) with Arcflash Reduction Maintenance System	**V2-T1-115**
Flex Center	**V2-T1-119**

Supplied by Digital Stout Innovation & Trading FZE

Enclosed Circuit Breakers—Power Defense

Product Description

Eaton's Power Defense™ circuit breakers are enclosed to meet the needs of various applications. Ratings are 15–1200 A, NEMA 1, 3R, 12 and 4X.

Application Description

NEMA 1 General Purpose

- Surface mount up to 1200 A or flush mount up to 400 A
- Designed for indoor use in commercial buildings, apartment buildings, and other areas where a general-purpose enclosure is applicable
- Front operable and is capable of being padlocked in the OFF position
- UL listed as suitable for service entrance application

NEMA 1 General Purpose

NEMA 3R Rainproof

- Designed for outdoor use to serve as a main disconnect and protective device for feeder circuits
- Side operable and is capable of being padlocked in the OFF position
- UL listed as suitable for service entrance application

NEMA 3R Rainproof

NEMA 12 Dustproof

- No knockouts or other openings
- Designed for severe conditions where oil, coolant, dust and other foreign material may exist
- Side operable and is capable of being padlocked in the OFF position
- UL listed as suitable for service entrance application

NEMA 12 Dustproof

NEMA 4/4X Waterproof

- No knockouts or other openings
- Designed for use in dairies, borax mines, breweries, paper mills and other process industries
- Side operable and is capable of being padlocked in the OFF position
- UL listed as suitable for service entrance application

NEMA 4/4X Waterproof

Features, Benefits and Functions

Standard Features

- NEMA Type 1, 3R, 12, 4X
- Padlockable in the OFF position
- Fully assembled from the factory, including enclosure, breaker and other applicable components

Optional Features

- PXR 10 and PXR 20 electronic trip units available
- For ground fault applications, LSIG protection is available
- Lock ON provision available
- Modifications available such as custom paint, key interlocks and more

For additional requests or options, call the Flex Center at 888-329-9272 or email FlexSwitches@eaton.com.

Standards and Certifications

- UL 489
- CSA 22.2, No. 4 and No. 5
- NEMA 250

Seismic Qualifications

- Enclosed circuit breakers meet or exceed the requirements of Uniform Building Code (UBC) and California Department of Health Care Access and Information (HCAI), formerly the Office of Statewide Health Planning and Development (OSHPD)

Supplied by Digital Stout Innovation & Trading FZE

1

Catalog Number Selection

Assembled Enclosed Circuit Breakers

S 1 3 S 100 D T J - A1S1

NEMA Enclosure
- **S** = NEMA 1 surface
- **F** = NEMA 1 flush ①
- **R** = NEMA 3R
- **D** = NEMA 12/3R
- **W** = NEMA 4X (304) stainless
- **X** = NEMA 4X (316) stainless

Breaker Frame
- **1** = Frame 1 (15–125 A)
- **2** = Frame 2 (15–225 A)
- **3** = Frame 3 (45–600 A)
- **4** = Frame 4 (300–800 A)
- **5** = Frame 5 (320–1200 A)

Number of Poles
- **3** = Three-pole

kAIC Performance
- **S** = Standard
  35/50 at 480 Vac ②
  18/25 at 600 Vac ③
- **H** = High
  65 at 480 Vac
  25/35 at 600 Vac ④
- **C** = Highest
  100 at 480 Vac ⑤

Ampere Rating—Thermal-Magnetic
- **015** = 15 A
- **020** = 20 A
- **025** = 25 A
- . . .
- **25H** = 250 A—high override ⑥
- **30H** = 300 A—high override ⑥
- **35H** = 350 A—high override ⑥
- **40H** = 400 A—high override ⑥
- **700** = 700 A
- **800** = 800 A
- **12X** = 1200 A

Neutral
- **N** = With neutral
- **D** = No neutral

Trip Unit
- **T** = Thermal-magnetic
- **1** = PXR 10
- **2** = PXR 20 LSI no relay
- **3** = PXR 20 LSI programmable relay
- **4** = PXR 20 LSI Modbus relay
- **5** = PXR 20 LSIG programmable relay
- **6** = PXR 20 LSIG Modbus relay

Ampere Rating—Electronic Trip Unit (Trip Settings)
- **060** = 15 A, 16 A, 20 A, 25 A, 30 A, 35 A, 40 A, 45 A, 50 A, 60 A
- **100** = 32 A, 35 A, 40 A, 50 A, 60 A, 63 A, 70 A, 80 A, 90 A, 100 A
- **125** = 45 A, 50 A, 60 A, 63 A, 70 A, 80 A, 90 A, 100 A, 110 A, 125 A
- **150** = 50 A, 60 A, 63 A, 70 A, 80 A, 90 A, 100 A, 110 A, 125 A, 150 A
- **225** = 80 A, 90 A, 100 A, 110 A, 125 A, 150 A, 160 A, 175 A, 200 A, 225 A
- **250** = 90 A, 100 A, 110 A, 125 A, 150 A, 160 A, 175 A, 200 A, 225 A, 250 A
- **400** = 160 A, 175 A, 200 A, 225 A, 250 A, 275 A, 300 A, 320 A, 350 A, 400 A
- **25H** = 90 A, 100 A, 110 A, 125 A, 150 A, 160 A, 175 A, 200 A, 225 A, 250 A—high override ⑦
- **40H** = 160 A, 175 A, 200 A, 225 A, 250 A, 275 A, 300 A, 320 A, 350 A, 400 A—high override ⑦
- **600** = 250 A, 275 A, 300 A, 320 A, 350 A, 400 A, 450 A, 500 A, 550 A, 600 A
- **800** = 320 A, 350 A, 400 A, 450 A, 500 A, 550 A, 600 A, 630 A, 700 A, 800 A
- **12X** = 500 A, 550 A, 600 A, 630 A, 700 A, 800 A, 900 A, 1000 A, 1100 A, 1200 A

Terminals ⑦
- **J** = Standard terminals
- **1** = Optional terminal 1
- **2** = Optional terminal 2
- **3** = Optional terminal 3
- **4** = Optional terminal 4
- **5** = Optional terminal 5

Options/Modifications/Accessories ⑧
- **00A1** = 1NO/1NC auxiliary
- **00A2** = 2NO/2NC auxiliary
- **00S1** = 120 V shunt
- **00S2** = 24 V shunt
- **A1S1** = 1NO/1NC auxiliary, 120 V shunt
- **00NP** = Nameplate
- **00LO** = Lock on
- **00SE** = Service entrance (Canada only)
- **00TK** = Kirk Key/trapped key

Notes

① 400 A maximum.
② 35 kAIC for Frames 1, 2, 3 and 4. 50 kAIC for Frame 5.
③ 18 kAIC for Frames 1, 2, 3 and 4. 25 kAIC for Frame 5.
④ 25 kAIC for Frames 1 and 2. 35 kAIC for Frames 3, 4 and 5.
⑤ Applicable only for Frames 2 and 3.
⑥ 600 A Frame 3 and enclosures only.
⑦ See terminal selection chart.
⑧ More combinations and options are available.

Supplied by Digital Boat Innovation & Trading FZE

Product Selection

PD Breaker Enclosures—Enclosure Only

Breaker Frame	Breaker Maximum Ampere Rating	NEMA Rating	Catalog Number
PD1	125	NEMA 1	**SPD1K0125**
		NEMA 1 flush	**FPD1K0125**
		NEMA 3R	**RPD1K0125**
		NEMA 12/3R	**DPD1K0125**
		NEMA 4X	**WPD1K0125**
PD2	225	NEMA 1	**SPD2K0225**
		NEMA 1 flush	**FPD2K0225**
		NEMA 3R	**RPD2K0225**
		NEMA 12/3R	**DPD2K0225**
		NEMA 4X	**WPD2K0225**
PD3 (400 A)	400	NEMA 1	**SPD3K0400**
		NEMA 1 flush	**FPD3K0400**
		NEMA 3R	**RPD3K0400**
		NEMA 12/3R	**DPD3K0400**
		NEMA 4X	**WPD3K0400**
PD3 (600 A)	600	NEMA 1	**SPD3K0600**
		NEMA 3R	**RPD3K0600**
		NEMA 12/3R	**DPD3K0600**
		NEMA 4X	**WPD3K0600**
PD4	800	NEMA 1	**SPD4K0800**
		NEMA 3R	**RPD4K0800**
		NEMA 12/3R	**DPD4K0800**
		NEMA 4X	**WPD4K0800**
PD5	1200	NEMA 1	**SPD5K1200**
		NEMA 3R	**RPD5K1200**
		NEMA 12/3R	**DPD5K1200**
		NEMA 4X	**WPD5K1200**

Neutral Kits

		Neutral Kits					
PD Breaker Enclosures		Standard Neutral Kits			Neutral Kits with Current Sensor		
Breaker Frame	Breaker Maximum Ampere Rating	Catalog Number	Neutral Lug Size	Ground Lug Size	Catalog Number	Neutral Lug Size	Ground Lug Size
PD1	125	**ECD225NK**	(1) 250MCM–6	(1) 14–4/0	—	—	—
PD2	225	**ECB225NK**	(1) 250MCM–6	(1) 14–4/0	**ECB225NSK**	(1) 250MCM–6	(1) 14–4/0
PD3 (400 A)	400	**ECB400NK**	(1) 750MCM–1/0 or (2) 300MCM–1/0	(2) 3/0–250MCM	**ECB400NSK**	(1) 750MCM–1/0	(2) 3/0–250
PD3 (600 A)	600	**DS600NK**	(1) 750MCM–1/0 and (1) 600MCM–2	(2) 2–500MCM	**ECB600NSK**	(1) 750MCM–1/0 (1) 600MCM–2	(2) 2–500
PD4	800	**DS800NK**	(4) 750MCM–1/0	(3) 3/0–400MCM	**ECB800NSK**	(4) 750MCM–1/0	(3) 3/0–400
PD5	1200	**DS800NK**	(4) 750MCM–1/0	(3) 3/0–400MCM	**ECB1200NSK**	(4) 750MCM–1/0	(3) 3/0–400

Supplied by Digital Stout Innovation & Trading FZE

1

Trip Units

Frame	kAIC Rating	Trip Unit	Terminals ①	Catalog Number Circuit Breaker ②③	Frame	Trip Unit ②③
1	Standard	Thermal Magnetic	Standard	**PDG13GXXXXTFFJ**	—	—
			Optional	**PDG13GXXXXTFFN**		
	High	Thermal Magnetic	Standard	**PDG13MXXXXTFFJ**	—	—
			Optional	**PDG13MXXXXTFFN**		
2	Standard	Thermal Magnetic	"J" Standard	**PDG23GXXXXTFFJ**	—	—
		PXR10 Electronic Trip Unit		**PDG23GYYYYB2NJ**		
		PXR20 LSI No Relay		**PDG23GYYYYE2NJ**		
		PXR20 LSI Programmable Relay		**PDG23GYYYYE2RJ**		
		PXR20 LSI Modbus Relay		**PDG23GYYYYE2MJ**		
		PXR20 LSIG Programmable Relay		**PDG23GYYYYE3RJ**		
		PXR20 LSIG Modbus Relay		**PDG23GYYYYE3MJ**		
	High	Thermal Magnetic	Optional	**PDG23GXXXXTFFN**	—	—
		PXR10 Electronic Trip Unit		**PDG23GYYYYB2NN**		
		PXR20 LSI No Relay		**PDG23GYYYYE2NN**		
		PXR20 LSI Programmable Relay		**PDG23GYYYYE2RN**		
		PXR20 LSI Modbus Relay		**PDG23GYYYYE2MN**		
		PXR20 LSIG Programmable Relay		**PDG23GYYYYE3RN**		
		PXR20 LSIG Modbus Relay		**PDG23GYYYYE3MN**		
3 (400 A and 600 A)	Standard	Thermal Magnetic	Any	—	For 400 A: **PDG33G0400FNNN** For 600 A: **PDG33G0600FNNN**	**PDG3XTFA3XXXX**
		PXR10 Electronic Trip Unit				**PDG3XPXR3YYYYB2N**
		PXR20 LSI No Relay				**PDG3XPXR3YYYYE2N**
		PXR20 LSI Programmable Relay				**PDG3XPXR3YYYYE2R**
		PXR20 LSI Modbus Relay				**PDG3XPXR3YYYYE2M**
		PXR20 LSIG Programmable Relay				**PDG3XPXR3YYYYE3R**
		PXR20 LSIG Modbus Relay				**PDG3XPXR3YYYYE3M**
	High	Thermal Magnetic	Any	—	For 400 A: **PDG33M0400FNNN** For 600 A: **PDG33M0600FNNN**	**PDG3XTFA3XXXX**
		PXR10 Electronic Trip Unit				**PDG3XPXR3YYYYB2N**
		PXR20 LSI No Relay				**PDG3XPXR3YYYYE2N**
		PXR20 LSI Programmable Relay				**PDG3XPXR3YYYYE2R**
		PXR20 LSI Modbus Relay				**PDG3XPXR3YYYYE2M**
		PXR20 LSIG Programmable Relay				**PDG3XPXR3YYYYE3R**
		PXR20 LSIG Modbus Relay				**PDG3XPXR3YYYYE3M**
4	Standard	Thermal Magnetic	Any	—	**PDG43G0800FNNN**	**PDG4XTFA3XXXX**
		PXR10 Electronic Trip Unit				**PDG4XPXR30800B2N**
		PXR20 LSI No Relay				**PDG4XPXR30800E2N**
		PXR20 LSI Programmable Relay				**PDG4XPXR30800E2R**
		PXR20 LSI Modbus Relay				**PDG4XPXR30800E2M**
		PXR20 LSIG Programmable Relay				**PDG4XPXR30800E3R**
		PXR20 LSIG Modbus Relay				**PDG4XPXR30800E3M**
	High	Thermal Magnetic	Any	—	**PDG43M0800FNNN**	**PDG4XTFA3XXXX**
		PXR10 Electronic Trip Unit				**PDG4XPXR30800B2N**
		PXR20 LSI No Relay				**PDG4XPXR30800E2N**
		PXR20 LSI Programmable Relay				**PDG4XPXR30800E2R**
		PXR20 LSI Modbus Relay				**PDG4XPXR30800E2M**
		PXR20 LSIG Programmable Relay				**PDG4XPXR30800E3R**
		PXR20 LSIG Modbus Relay				**PDG4XPXR30800E3M**
5	Standard	PXR20 LSI No Relay	Any	**PDG53K0800E2NN** and **PDG53K1200E2NN**	—	—
		PXR20 LSI Programmable Relay		**PDG53K0800E2RN** and **PDG53K1200E2RN**		
		PXR20 LSI Modbus Relay		**PDG53K0800E2MN** and **PDG53K1200E2MN**		
		PXR20 LSIG Programmable Relay		**PDG53K0800E3RN** and **PDG53K1200E3RN**		
		PXR20 LSIG Modbus Relay		**PDG53K0800E3MN** and **PDG53K1200E3MN**		
	High	PXR20 LSI No Relay	Any	**PDG53M0800E2NN** and **PDG53M1200E2NN**	—	—
		PXR20 LSI Programmable Relay		**PDG53M0800E2RN** and **PDG53M1200E2RN**		
		PXR20 LSI Modbus Relay		**PDG53M0800E2MN** and **PDG53M1200E2MN**		
		PXR20 LSIG Programmable Relay		**PDG53M0800E3RN** and **PDG53M1200E3RN**		
		PXR20 LSIG Modbus Relay		**PDG53M0800E3MN** and **PDG53M1200E3MN**		

Notes

① See "Terminal Selection" section for standard and optional terminals.
② YYYY = For Electronic Trip Units, substitute YYYY for that range of trip settings. If they select the 60 A maximum for the Frame 2, then YYYY = 0060.
③ XXXX = For Thermal-Magnetic Trip Units, substitute XXXX for their amperage selection. If they select 100 A, then XXXX = 0100.

Supplied by Digital Stout Innovation & Trading FZE

Terminal Selection

Frame	Ampere Rating	Size	Three-Pole Kit Catalog Number
"J" Standard Terminal			
1	15–125	(1) 14–3/0	**PDG1X3T125**
2	15–100	(1) 14–1/0	**PDG2X3T100**
	110–225	(1) 4–4/0	**PDG2X3TA225**
3	100–225	(1) 3–350MCM	**PDG3X3TA300**
	250–350	(1) 250MCM–500MCM	**PDG3X3TA350**
	400	(2) 3/0–250MCM	**PDG3X3TA400**
	450–600	(2) 2–500MCM	**PDG3X3TA630**
4	300–700	(2) 1–500MCM	**PDG4X3TA700**
	800	(3) 3/0–400MCM	**PDG4X3TA800**
5	800	(3) 3/0–400MCM	**(3) PDG5X1TA1000**
	1200	(4) 4/0–500MCM	**(3) PDG5X1TA1200**

Frame	Description	Size	Three-Pole Kit Catalog Number
Optional Terminal			
1	Option 1	(1) 14–1/0	**PDG1X3TA125**
2	Option 1	(1) 6–300MCM	**PDG2X3TA225A**
	Option 2—Copper	(1) 4–4/0	**PDG2X3T225**
3	Option 1—Copper	(1) 3–350MCM	**PDG3X3T300**
	Option 2—Copper	(1) 250MCM–500MCM	**PDG3X3T350**
	Option 3—Copper	(2) 3/0–250MCM	**PDG3X3T400**
	Option 4—Copper	(1) 500MCM–750MCM	**PDG3X3T401H**
	Option 5—Copper	(2) 2–500MCM	**PDG3X3T630**
4	Option 1	(2) 500MCM–750MCM	**PDG4X3TA801**
	Option 2—Copper	(2) 2/0–500MCM	**(3) PDG4X1T600**
	Option 3—Copper	(3) 3/0–300MCM	**(3) PDG4X1T800**
5	Option 1	(2) 1–500MCM	**(3) PDG5X1TA700**
	Option 2	(3) 500MCM–750MCM	**(3) PDG5X1TA1201**
	Option 3—Copper	(2) 2/0–500MCM	**(3) PDG5X1T700**
	Option 4—Copper	(3) 3/0–500MCM	**(3) PDG5X1T1000**
	Option 5—Copper	(4) 3/0–400MCM	**(3) PDG5X1T1200**

Dimensions

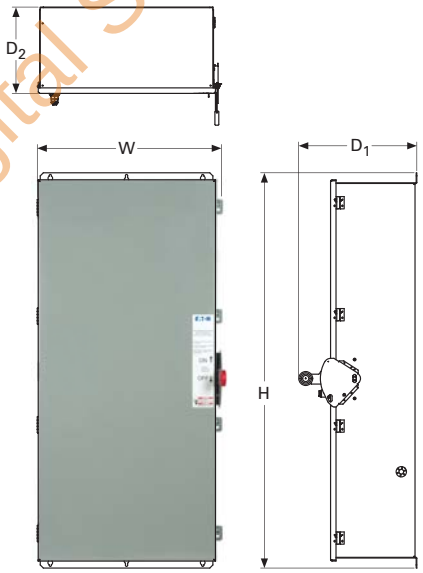

NEMA 1 Surface

Breaker Frame	NEMA Ratings	Maximum Ampere Rating	Height (H)	Width (W)	Depth (D1)	Depth (D2)	Approximate Weight in Lb (kg)
PD 1	NEMA 1	125	18.50 (469.9)	8.00 (203.2)	10.35 (262.9)	5.20 (132.1)	13 (6)
	NEMA 3R, 12, 4X	125	18.50 (469.9)	8.00 (203.2)	11.05 (280.7)	5.90 (149.9)	14 (6)
PD 2	NEMA 1	225	22.80 (579.1)	8.00 (203.2)	10.35 (262.9)	5.20 (132.1)	17 (8)
	NEMA 3R, 12, 4X	125	22.80 (579.1)	8.00 (203.2)	11.55 (293.4)	6.40 (162.6)	25 (11)
PD 3	NEMA 1, 3R, 12, 4X	400	38.10 (967.7)	10.60 (269.2)	14.85 (377.2)	9.70 (246.4)	70 (32)
	NEMA 1 (surface only), 3R, 12, 4X	600	49.90 (1267.5)	21.30 (541.0)	13.55 (344.2)	8.40 (213.4)	93 (42)
PD 4	NEMA 1 (surface only), 3R, 12, 4X	800	60.00 (1524.0)	20.80 (528.3)	18.15 (461.0)	13.00 (330.2)	139 (63)
PD 5	NEMA 1 (surface only)	1200	60.00 (1524.0)	20.80 (528.3)	18.15 (461.0)	13.00 (330.2)	190 (86)
	NEMA 3R, 12, 4X	1200	60.00 (1524.0)	27.80 (706.1)	18.15 (461.0)	13.00 (330.2)	210 (95)

Supplied by Digital Stout Innovation & Trading FZE

1

Raintight Hubs

All rainproof enclosures 30–400 A are shipped with plate over cutout. Hubs are not supplied with screws on 30–400 A enclosures. Use screws from plate.

Raintight Hubs

Raintight Tubs ①

Hubs	Hub Diameter Inches	mm	Catalog Number
Small			
For use with RPD1–RPD3 (400 A) enclosures	0.75	19.1	**DS075H1**
	1.00	25.4	**DS100H1**
	1.25	31.8	**DS125H1**
	1.50	38.1	**DS150H1**
	2.00	50.8	**DS200H1**
Large			
For use with RPD1–RPD3 (400 A) enclosures	2.00	50.8	**DS200H2**
	2.50	63.5	**DS250H2**
	3.00	76.2	**DS300H2**

Note

① Myers hubs, Cat. No. ST–1 through 10, zinc, aluminum or stainless may be used on Type 3R, 12, 4X enclosures.

Supplied by Digital Stout Innovation & Trading FZE

Enclosed Circuit Breaker (ECB) with Arcflash Reduction Maintenance System

Contents

Description	*Page*
Enclosed Circuit Breakers—Power Defense	**V2-T1-108**
Enclosed Circuit Breaker (ECB) with Arcflash Reduction Maintenance System	
Catalog Number Selection	**V2-T1-116**
Product Selection	**V2-T1-116**
Wiring Diagram	**V2-T1-117**
Dimensions	**V2-T1-118**
Flex Center	**V2-T1-119**

Enclosed Circuit Breaker (ECB) with Arcflash Reduction Maintenance System

Product Description

Eaton's enclosed circuit breakers equipped with Arcflash Reduction Maintenance System™ technology improve safety by providing a simple and reliable method to reduce fault clearing time. Faster clearing time means less arc energy. Less arc energy exposure means improved worker safety.

The enclosed circuit breaker with Arcflash Reduction Maintenance System is a fully factory wired assembly, including an electronic trip circuit breaker, cover controls and other components that allow a customer to activate the Arcflash Reduction Maintenance System technology during maintenance. This maintenance mode is enabled by a simple lockable switch that can be incorporated into a lockout/tagout (LOTO) procedure. The resulting reduction in incident energy levels can help reduce levels of required personal protection equipment (PPE), offering an improvement to worker comfort, mobility and productivity.

Features

Standard Features

- Digitrip 310+ trip unit with ALSI protection
- Full range, 55 A to 1200 A
- NEMA Type 1, 3R, 12, 4X
- 600 Vac maximum
- 65 kAIC maximum at 480 Vac
- Additional control relay included to allow users to enable the Arcflash Reduction Maintenance System maintenance mode via a remote input signal
- 48 W power supply
- 100 VA CPT
- Cover controls, including padlockable selector switch for Arcflash Reduction Maintenance System maintenance mode activation and blue LED indication light
- Padlockable in the OFF position ①
- Padlockable enclosure
- Three-position handle (ON/Tripped/OFF)
- Assembly is fully factory wired and ready to go out of the box
- Can be applied on three-phase and single-phase systems ②

Notes

① From the factory, the handle can only be locked in the OFF position and can accommodate a maximum of three padlocks. Field modification to drill the shroud can allow locking in the ON position. Check with your local AHJ for requirements. The breaker will trip as usual, even with the handle locked ON.

② For single-phase applications, the customer must wire using the breaker's two outside poles.

Optional Features

- Standard molded case breaker accessories available
- For ground fault applications, ALSIG protection is available
- Modifications available such as custom paint, 316-stainless enclosures, lock-on provisions, and more. Call the Flex Center at 888-329-9272 for more information

Standards and Certifications

- UL 489 (File Number E309241)
- cUL® 489 (File Number E309241)
- NEC 240.87 Compliant

Listed

Seismic Qualifications

- Enclosed circuit breakers exceed the requirements of Uniform Building Code (UBC) and California Code Title 24 OSP-0338-10

Supplied by Digital Stout Innovation & Trading FZE

1

Catalog Number Selection

Enclosed Circuit Breaker (ECB) with Arcflash Reduction Maintenance System

AR 3 S A 1 N L2 R - A1S1

Enclosed Circuit Breaker (ECB) with Arcflash Reduction Maintenance System
AR

Ampere Rating/Frame
1 = 125 A, KD frame
2 = 250 A, KD frame
3 = 400 A, KD frame
4 = 600 A, LG frame
5 = 800 A, NG frame
6 = 1200 A, NG frame

kAIC Performance at 480 V
S = Standard (35/50) ①
H = High (65)

Trip Unit
A = ALSI
B = ALSIG ②

CPT Voltage
1 = 480 V
2 = 208 V
3 = 240 V
4 = 600 V

Neutral
N = With neutral
D = No neutral

Terminals
L1 = (1) 3–350, K frame
L2 = (2) 2/0–250 or (1) 2/0–500, K frame
L3 = (1) 500–750, K frame
L4 = (2) 2–500, L frame
L5 = (3) 3/0–400 800 A, N frame
L6 = (4) 4/0–500 800 A / 1200 A, N frame
L7 = (3) 500–750 800 A / 1200 A, N frame

NEMA Enclosure
G = NEMA 1
R = NEMA 3R
D = NEMA 12
P = NEMA 4 painted
W = NEMA 4X stainless
H = NEMA 1 100% rated
S = NEMA 3R 100% rated
E = NEMA 12 100% rated
Q = NEMA 4 painted 100% rated
X = NEMA 4X stainless 100% rated

Options/Modifications ③④
00A1 = 1NO/1NC auxiliary
00A2 = 2NO/2NC auxiliary
00S1 = 120 V shunt
00S2 = 24 V shunt
A1S1 = 1NO/1NC auxiliary, 120 V shunt
0316 = 316 stainless steel
WHIT = Painted white
ORNG = Painted orange
0B20 = High load alarm relay
00ZG = Zone selective interlocking
0B21 = GF alarm relay, breaker trips
0B22 = GF alarm relay, breaker no trip
316W = 316 stainless steel painted white
00LO = Lock on

Product Selection

ECB

Short-Circuit Ratings

Breaker Frame	kAIC Ratings 240 V	480 V	600 V	Catalog Numbers
KD	65	35	25	**AR1S, AR2S, AR3S**
HKD	100	65	35	**AR1H, AR2H, AR3H**
LGE	65	35	18	**AR4S**
LGH	100	65	35	**AR4H**
NGS	85	50	25	**AR5S, AR6S**
NGH	100	65	35	**AR5H, AR6H**

Neutral Field Kits

Ampere Rating/ Breaker Frame	Catalog Number Prefix	Trip Unit	Neutral Assembly	Neutral Wire Range
125A KD-frame	AR1	ALSI	**DS400NK**	2 lugs with range (1) 750 kcmil–1/0 or (2) 300 kcmil–1/0
		ALSIG	**AR1NGFCT** ⑤	3 lugs with range (1) 250 kcmil–#6
250A KD-frame	AR2	ALSI	**DS400NK**	2 lugs with range (1) 750 kcmil–1/0 or (2) 300 kcmil—1/0
		ALSIG	**AR2NGFCT** ⑤	3 lugs with range (1) 250 kcmil–#6
400A KD-frame	AR3	ALSI	**DS400NK**	2 lugs with range (1) 750 kcmil–1/0 or (2) 300 kcmil–1/0
		ALSIG	**AR3NGFCT** ⑤	3 lugs with range (1) 250 kcmil–#6
600A LG-frame	AR4	ALSI	**DS600NK**	2 lugs with range (1) 750 kcmil–1/0 and (1) 600 kcmil–#2
		ALSIG	**AR4NGFCT** ⑤	3 lugs with range (1) 250 kcmil–#6
800A NG-frame	AR5	ALSI	**DS800NK**	2 lugs with range (4) 750 kcmil–1/0
		ALSIG	**AR5NGFCT** ⑤	3 lugs with range (1) 250 kcmil–#6
1200A NG-frame	AR6	ALSI	**DS800NK**	2 lugs with range (4) 750 kcmil–1/0
		ALSIG	**AR5NGFCT** ⑤	3 lugs with range (1) 250 kcmil–#6

Notes
① Standard = 35 kAIC for KD and LG, 50 kAIC for NG.
② Neutral CTs are included for ground fault protected breakers (ALSIG option).
③ More combinations and options are available.
④ Breaker accessories (shunt, UVR, etc.) can be field installed. See molded case breaker catalog section for information regarding accessories and proper installation.
⑤ Includes neutral and ground fault neutral sensor.

Supplied by Digital Stout Innovation Trading FZE

Wiring Diagram

ECB with Arcflash Reduction Maintenance System Wiring

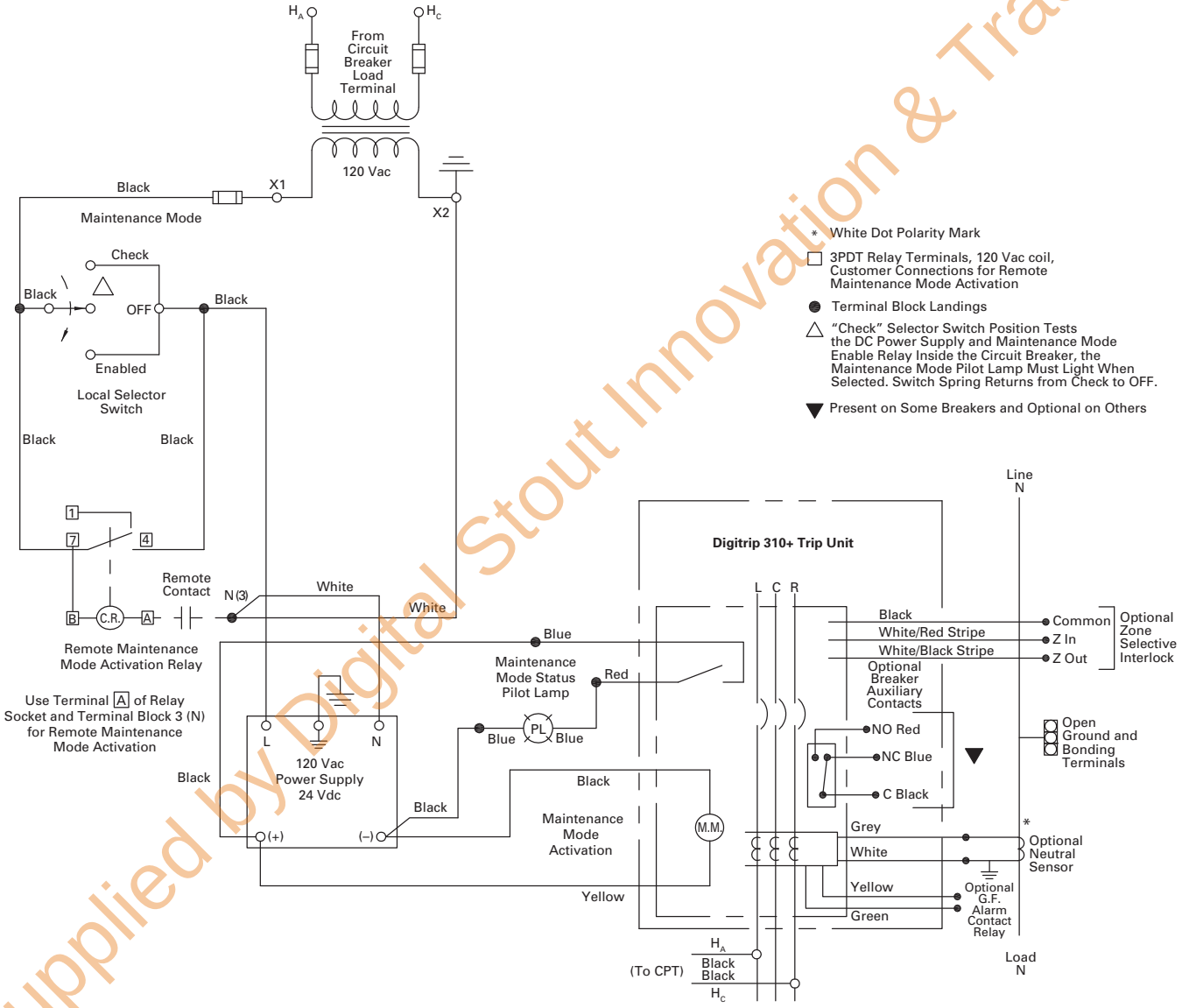

Supplied by Digital Stout Innovation & Trading FZE

1

Dimensions

Approximate Dimensions in Inches (mm)

ECB with Arcflash Reduction Maintenance System

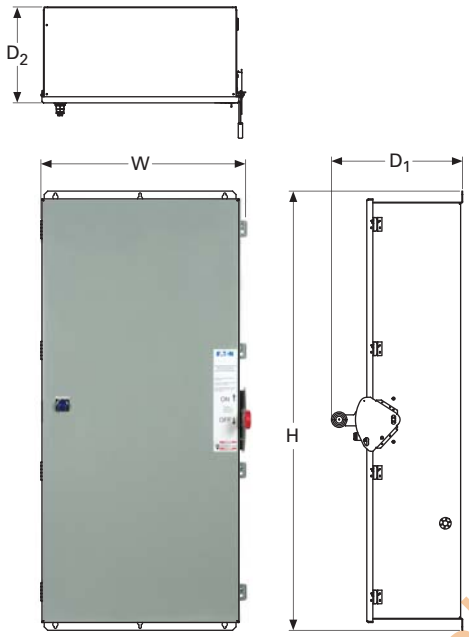

Breaker Frame	Maximum Amperage	Height (H)	Width (W)	Depth (D1)	Depth (D2)
K	400	53.63 (1362.2)	26.48 (672.6)	12.69 (322.3)	7.54 (191.5)
LG	600	53.63 (1362.2)	26.48 (672.6)	12.69 (322.3)	7.54 (191.5)
NG	1200	63.54 (1614.0)	29.63 (752.6)	18.99 (482.3)	13.87 (352.3)
K 100% rated	400	53.63 (1362.2)	26.48 (672.6)	12.69 (322.3)	7.54 (191.5)
LG 100% rated	600	53.63 (1362.2)	26.48 (672.6)	12.69 (322.3)	7.54 (191.5)
NG 100% rated	1200	70.99 (1803.2)	29.62 (752.4)	18.93 (480.8)	13.81 (350.8)

Supplied by Digital Stout Innovation & Trading FZE

Supplied by Digital Stout Innovation & Trading FZE

Flex Center

Introduction

The Switching Devices Flex Center can design and modify safety switches, enclosed circuit breakers and rotary disconnects for needs that are not met by standard products. Solutions can be custom designed for harsh environments, enhanced safety and convenience, and to meet the needs of specific applications.

The Flex Center provides:

- A dedicated and knowledgeable team to meet your needs
- Easy ordering through distributors
- A stocked production facility to provide factory installed modifications including:
  - Special size enclosure
  - Special nameplates
  - Stainless steel flush cover
  - Special paint
  - Lock-on provisions
  - Neutral assemblies—factory installed
  - Equipment ground lugs—factory installed
  - Cover control (pilot lights, pushbuttons, selector switches, etc.)
  - Factory-installed G-Frame breakers
- For application, availability or pricing questions, contact the Safety Switch Flex Center at **1-888-329-9272** or FlexSwitches@eaton.com

Satellite Plants

Atlanta
7000 Highlands Parkway SE
Suite 102
Smryna, GA 30082
678.309.4260

Baltimore
7451 Coca Cola Drive
Suite C
Hanover, MD 21076
410.796.7777

Chicago
230 Windy Point Drive
Glendale Heights, IL 60139
630.260.6303

Cleveland
12875 Corporate Drive
Unit E
Parma, OH 44130
216.265.3284

Dallas
631 Westport Parkway
Suite 100
Grapevine, TX 76051
817.251.6733

Denver
2450 Airport Road
Suite C
Aurora, CO 80011
303.366.2080

El Paso
45 Butterfield Circle
Suite C
El Paso, TX 79906
915.881.0259

Hartford
40A International Drive
Windsor, CT 06095
860.298.1305

Houston
14825 Northwest Freeway
Suite 100
Houston, TX 77040
713.744.7530

Juarez
Prolongacion
Hermanos Escobar
#7014, Parque
Industrial Omega
Adicion Oriental Cd.
Juarez, Chihuahua Mexico
32648

Los Angeles–P&S
13201 Dahlia Street
Suite 300
Fontana, CA 92337
919.428.8903

Nashville
1421 Gould Blvd
Suite C
La Vergne, TN 37086
615.287.3200

Phoenix
560 N 54th Street
Suite 1
Chandler, AZ 85226
480.449.4222

Raleigh
9400 Globe Center Drive
Suite 121
Morrisville, NC 27560
919.544.7074

St. Louis
56 Soccer Park Road
Fenton, MO 63026
636.717.3500

San Francisco
20923 Cabot Boulevard
Hayward, CA 94545
510.784.8981

Seattle
1604 15th Street SW
Suite 114
Auburn, WA 98001
253.833.5021

Sumter
Main Manufacturing Plant
845 Corporate Circle
Sumter, SC 29154
803.481.3131

Westampton
96 Stemmers Lane
Westampton, NJ 08060
609.835.4230

Satellite Service Locations

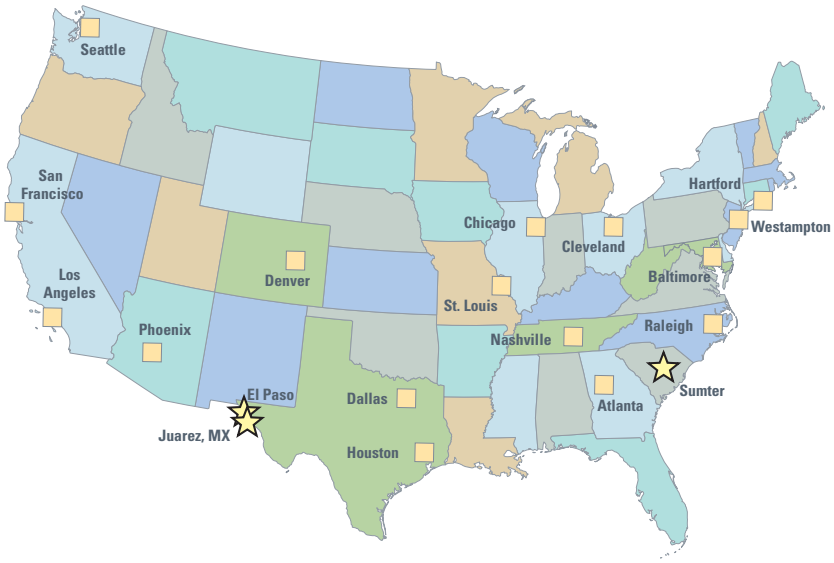

Enclosed Rotary Disconnects

Contents

Description	*Page*
Product Overview	**V2-T1-120**
Features, Benefits and Functions	**V2-T1-120**
Standards and Certifications	**V2-T1-120**
Product Selection	**V2-T1-121**
Dimensions	**V2-T1-122**

Product Overview

Eaton's enclosed rotary disconnect switches allow safe control and disconnect of motor applications. They provide users with the ability to lock directly wired motor loads in the OFF position to comply with OSHA lockout/tagout regulations.

Rotary disconnects can also be used in machine applications that require compact, economical disconnect switches.

Features, Benefits and Functions

- Padlockable in the OFF position (up to three padlocks) to meet OSHA lockout requirements
- Available in 16–80 A ratings
- 600 Vac, three- and four-pole non-fusible device
- Rated for making and breaking loads
- Accepts auxiliary contacts; capability to signal PLC controllers
- Ground lug connection provided
- Possibility of adding one power pole and one auxiliary contact
- NEMA Type 1, 3R, 12, 4, 4X

Open rotary disconnects can be found in Volume 5, Tab 3 titled: NEMA Manual Starters.

Standards and Certifications

- Meets NEC® Article 430 requirements for a separate disconnect means within sight of all motor loads
- UL® listed under Section 508
- UL listed File No. E165150
- CSA® listed under 22.2 No. 14, File 162136

Listed

Supplied by Digital Stout Innovation & Trading FZE

Proof #5 — Zoltun Design — 4/11/22

Product Selection

Enclosed Rotary Non-Fusible

Ampere Rating	Maximum Horsepower Ratings Three-Phase AC 208 V	240 V	480 V	600 V	NEMA 1 ① Enclosure Indoor Catalog Number	NEMA 12 ①② Enclosure Dust-Tight/ Rainproof Catalog Number	NEMA 4X ① Enclosure Corrosion-Resistant, Stainless Steel Catalog Number	NEMA 4X ① Enclosure Corrosion-Resistant, Non-Metallic Catalog Number	NEMA 4X Enclosure Polycarbonate-Non-Metallic Catalog Number
Three-Pole, 600 Vac									
16	3	5	10	10	**ER53016UG**	**ER53016UD**	**ER53016UW**	**ER53016UX**	—
25	7-1/2	7-1/2	15	20	**ER53025UG**	**ER53025UD**	**ER53025UW**	**ER53025UX**	—
30	7-1/2	7-1/2	15	20	**ER53030UG**	**ER53030UD**	**ER53030UW**	**ER53030UX**	**ER53030UPGB** ③④
40	7-1/2	7-1/2	20	25	**ER53040UG**	**ER53040UD**	**ER53040UW**	**ER53040UX**	—
60	15	15	30	30	**ER53060UG**	**ER53060UD**	**ER53060UW**	**ER53060UX**	**ER53060UPGB** ③④
80	15	20	40	40	**ER53080UG**	**ER53080UD**	**ER53080UW**	**ER53080UX**	—
Four-Pole, 600 Vac									
16	3	5	10	10	**ER54016UG**	**ER54016UD**	**ER54016UW**	**ER54016UX**	—
25	7-1/2	7-1/2	15	20	**ER54025UG**	**ER54025UD**	**ER54025UW**	**ER54025UX**	—
30	7-1/2	7-1/2	20	25	**ER54030UG**	**ER54030UD**	**ER54030UW**	**ER54030UX**	—
40	7-1/2	7-1/2	20	25	**ER54040UG**	**ER54040UD**	**ER54040UW**	**ER54040UX**	—

Accessories for Enclosed Rotary Disconnects ⑤⑥

Disconnect Ampere Rating	Switched Fourth Pole	Unswitched Neutral Pole	Auxiliary Contacts (Choose one)	Terminal Shrouds
16	**S4PR516**	**UNMR5A**	1NO + 1NC **AC1NONC**	Single-pole **TS1R5A**
25	**S4PR525**			
30	**S4PR530**		2NO **AC2NO**	Three-pole **TS3R5A**
40	**S4PR540**			
60	**S4PR560**	**UNMR5B**		Single-pole **TS1R5B**
80	**S4PR580**			Three-pole **TS3R5B**

Notes

① For CSA listed switches, add prefix letter "C" to the front of the catalog number.
② NEMA Type 12 enclosures (16–80 A) can be field modified to meet NEMA Type 3R rainproof requirements when a factory-provided drain hole is opened.
③ GB suffix = Gray cover, Black handle. GR suffix = Gray cover, Red handle. YR suffix = Yellow cover, Red handle.
④ cULus only.
⑤ Ordered and shipped as separate components—not integral to enclosed device.
⑥ Enclosed disconnects can accept one power pole, neutral or up to two auxiliary contacts (one mounted on either side of switch).

Contact the Safety Switch Flex Center (**1-888-329-9272** or FlexSwitches@eaton.com) for factory-installed accessories or other special modifications.

Supplied by Digital Stout Innovation & Trading FZE

Proof #5 — Zoltun Design — 4/11/22

1

Dimensions

Approximate Dimensions in Inches (mm)

NEMA Type 1 (16–40 A)

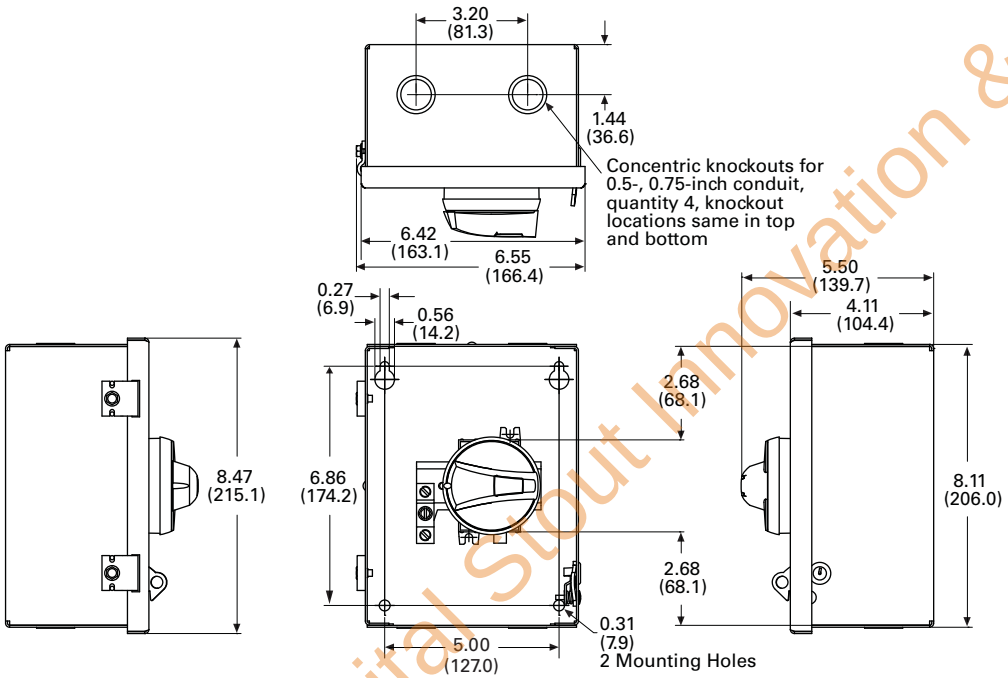

Note:
Wire range of switch lugs for 16–25 A is #6–#10 copper, and for 30–40 A is #8–#14.
Wire range of ground lugs is #2–#14 copper or aluminum.

NEMA Type 1 (60–80 A)

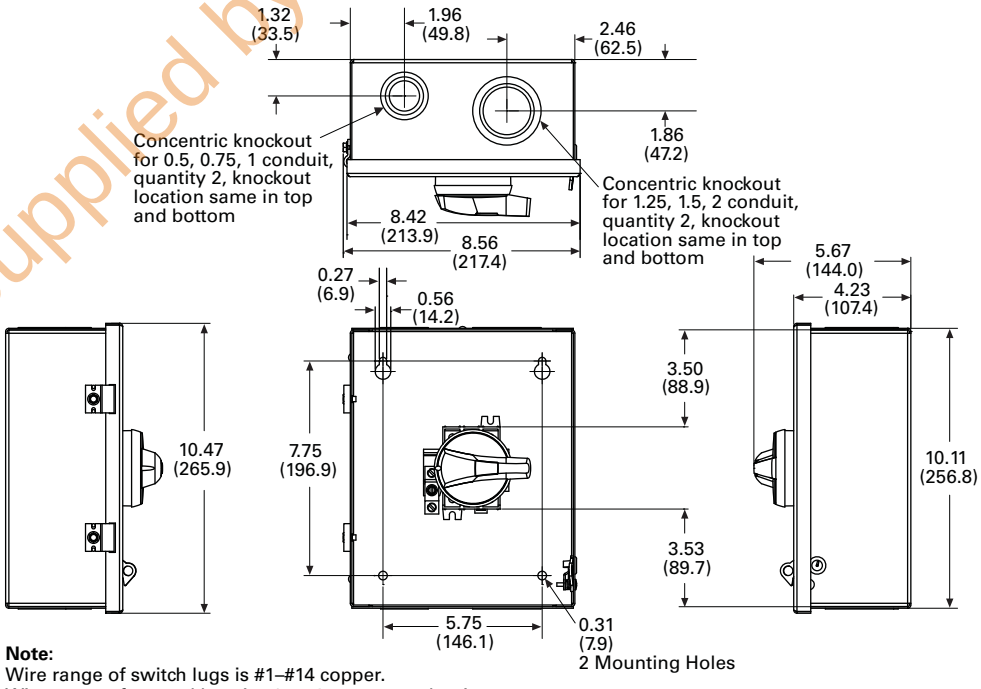

Note:
Wire range of switch lugs is #1–#14 copper.
Wire range of ground lugs is #2–#14 copper or aluminum.

Supplied by Digital Stout Innovation & Trading FZE

Proof #5 — Zoltun Design — 4/11/22

Approximate Dimensions in Inches (mm)

NEMA Type 12/3R (16–40 A)

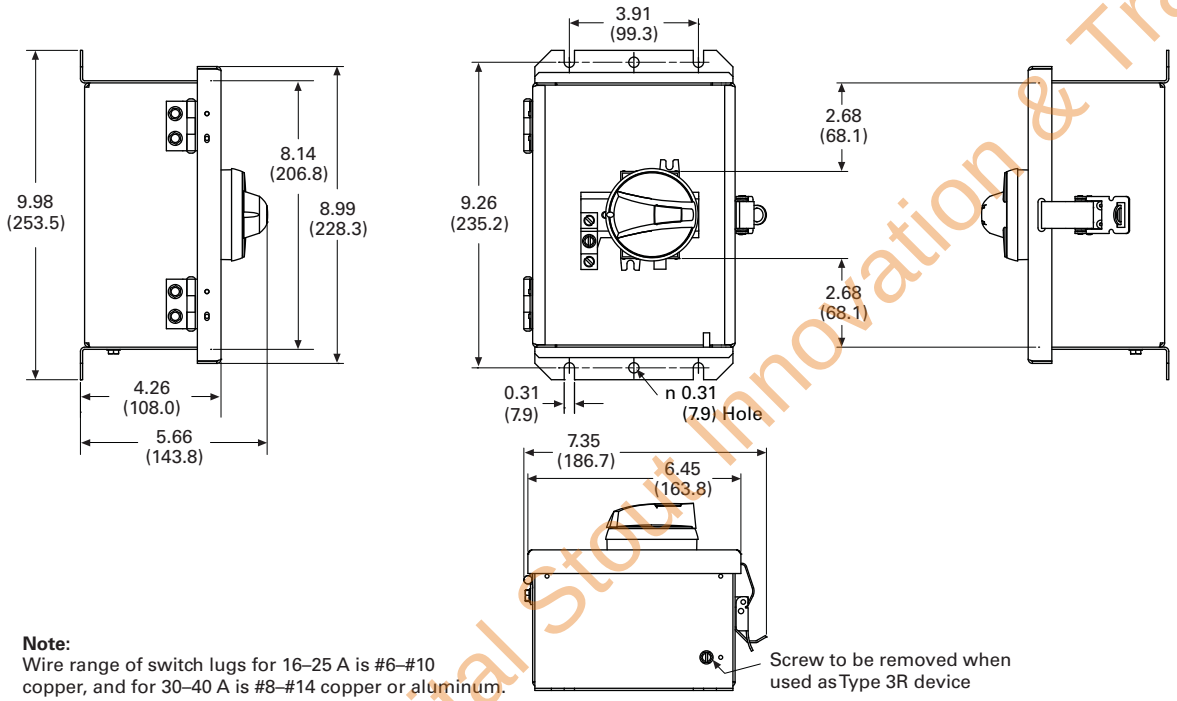

Note:
Wire range of switch lugs for 16–25 A is #6–#10 copper, and for 30–40 A is #8–#14 copper or aluminum.

NEMA Type 12/3R (60–80 A)

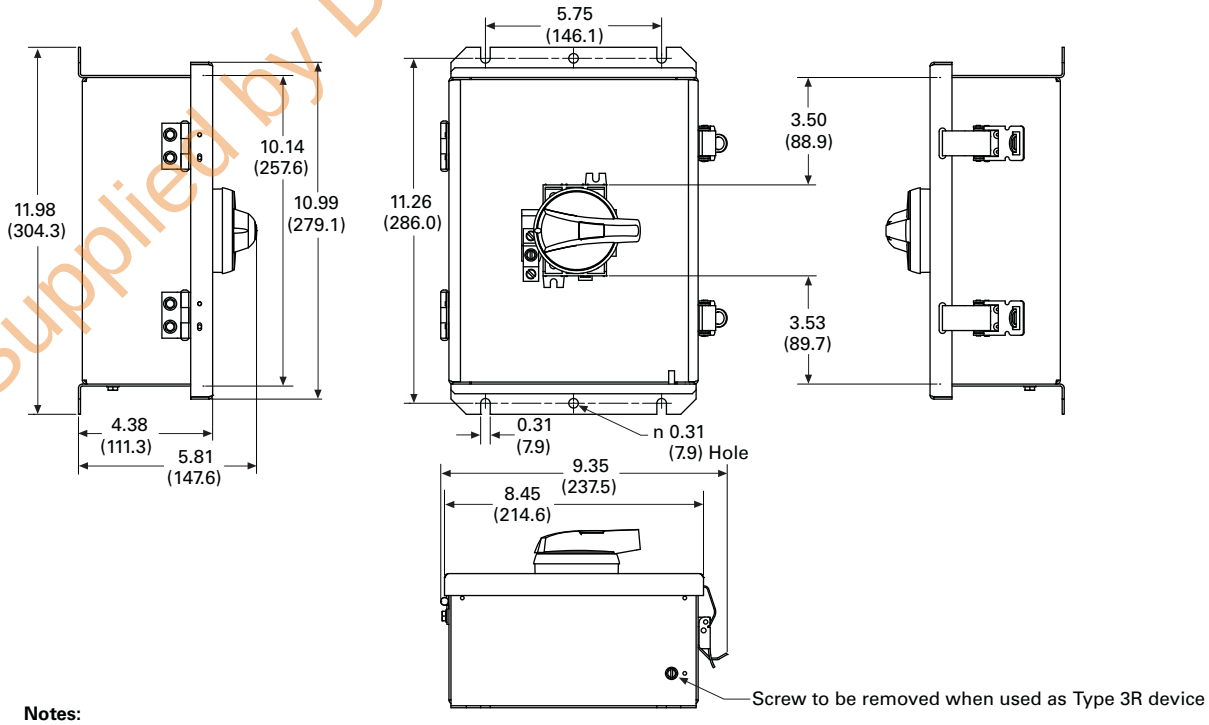

Notes:
Wire range of switch lugs is #1–#14 copper.
Wire range of ground lugs is #2–#14 copper or aluminum.

Supplied by Digital Stout Innovation & Trading FZE

Proof #5 — Zoltun Design — 4/11/22

1

Approximate Dimensions in Inches (mm)

NEMA Type 4X Stainless (16–40 A)

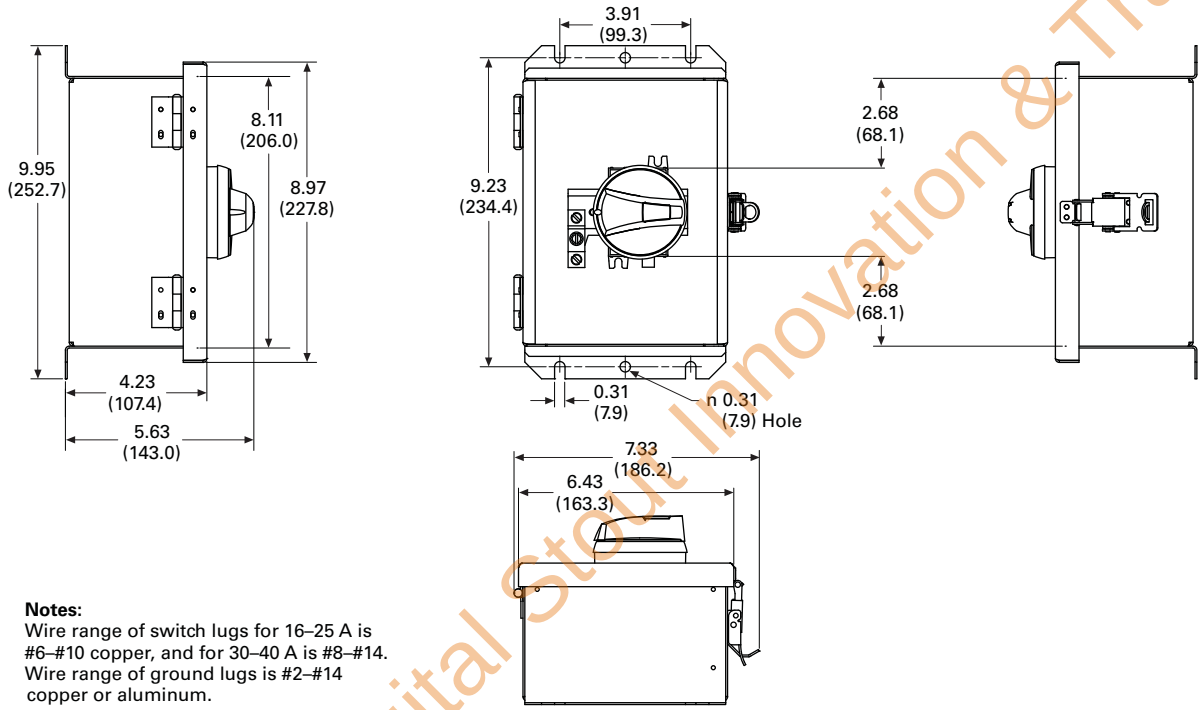

Notes:
Wire range of switch lugs for 16–25 A is #6–#10 copper, and for 30–40 A is #8–#14.
Wire range of ground lugs is #2–#14 copper or aluminum.

NEMA Type 4X Stainless (60–80 A)

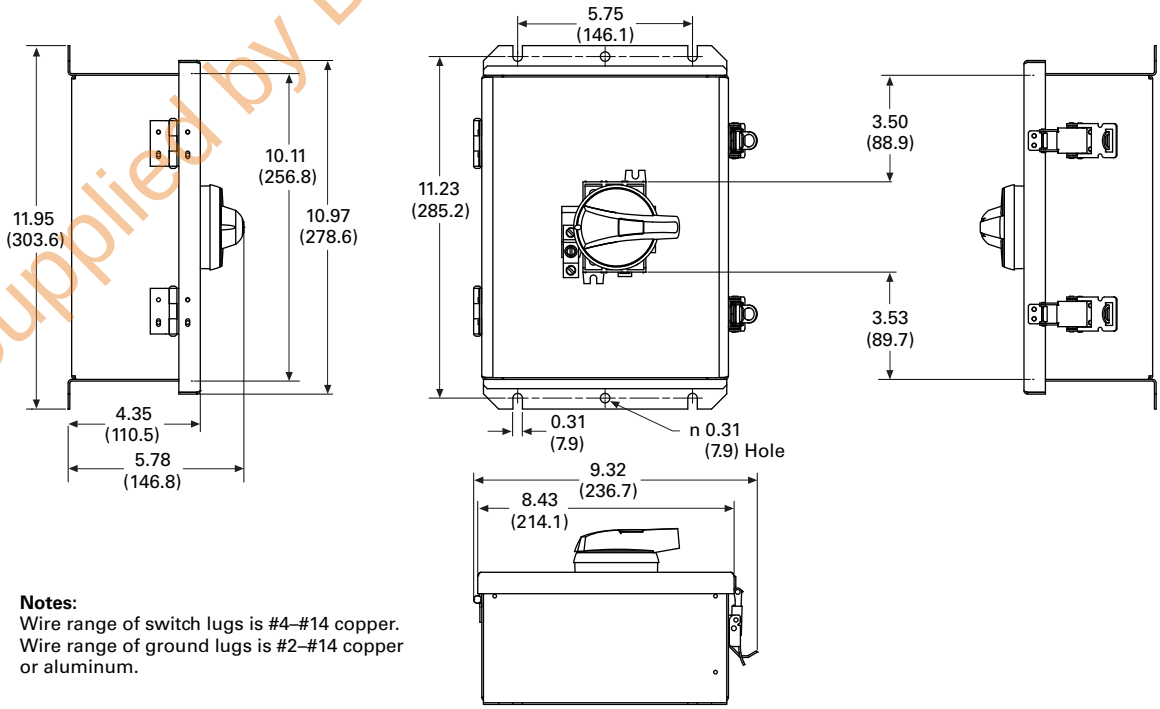

Notes:
Wire range of switch lugs is #4–#14 copper.
Wire range of ground lugs is #2–#14 copper or aluminum.

Supplied by Digital Stout Innovation & Trading FZE

Proof #5 — Zoltun Design — 4/11/22

Approximate Dimensions in Inches (mm)

NEMA Type 4X Thermoset Polyester (16–40 A)

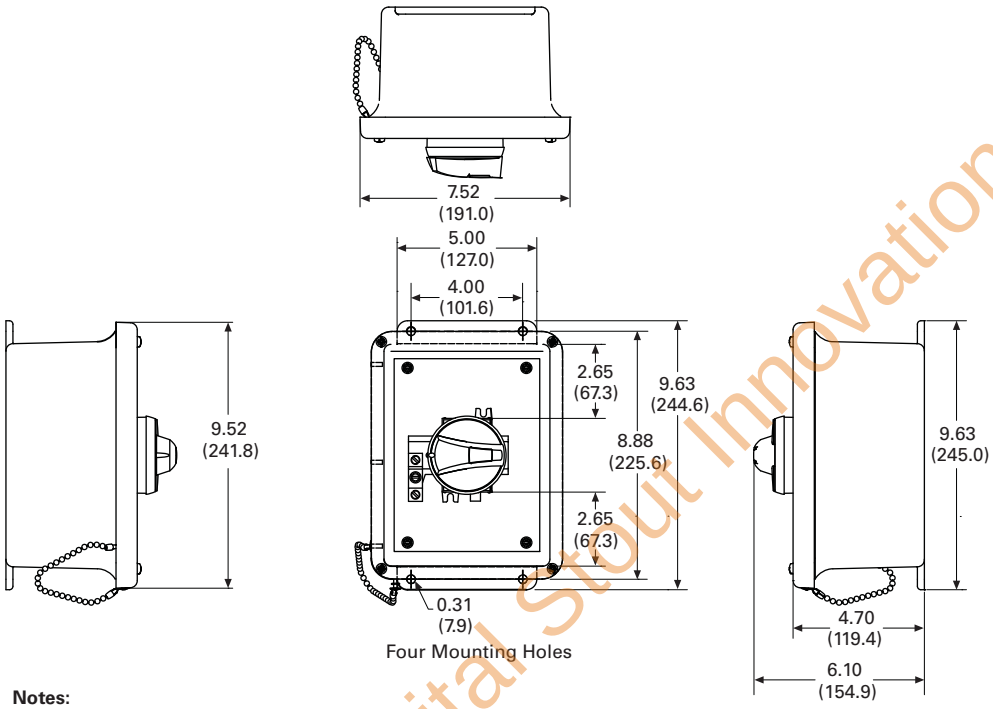

Notes:
Wire range of switch lugs for 16–25 A is #6–#10 copper, and for 30–40 A is #8–#14.
Wire range of ground lugs is #2–#14 copper or aluminum.

NEMA Type 4X Thermoset Polyester (60–80 A)

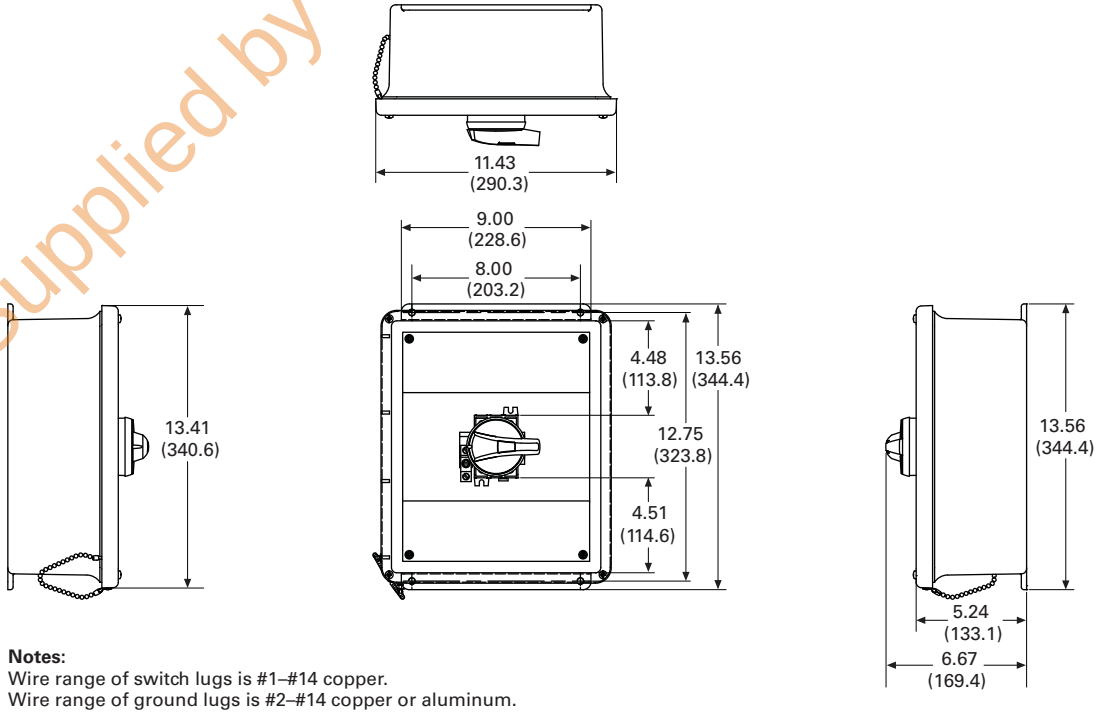

Notes:
Wire range of switch lugs is #1–#14 copper.
Wire range of ground lugs is #2–#14 copper or aluminum.

Supplied by Digital Stout Innovation & Trading FZE

Proof #5 — Zoltun Design — 4/11/22

1

Approximate Dimensions in Inches (mm)

NEMA Type 4X—Polycarbonate (30 A)

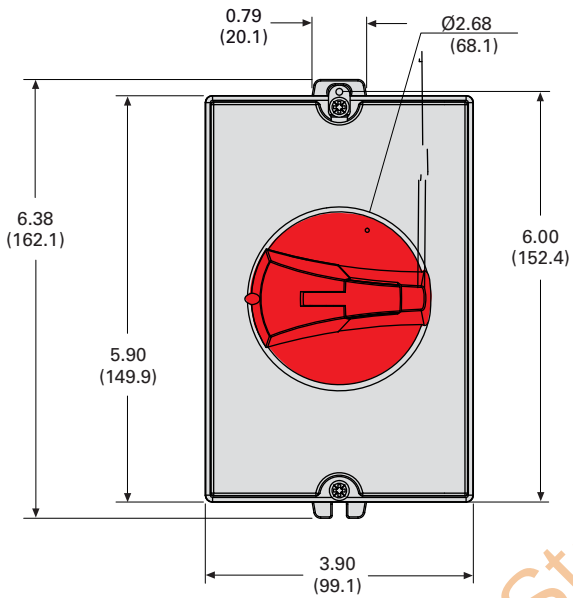

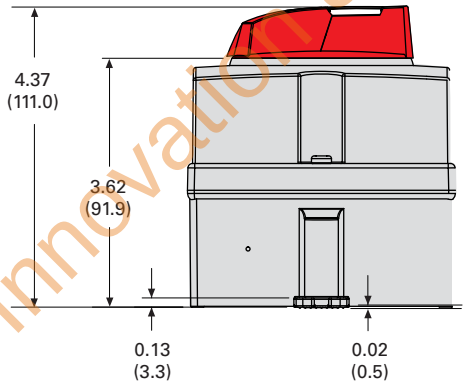

NEMA Type 4X—Polycarbonate (60 A)

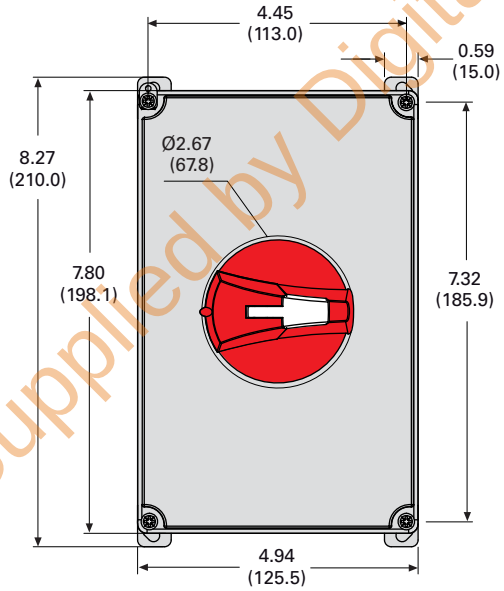

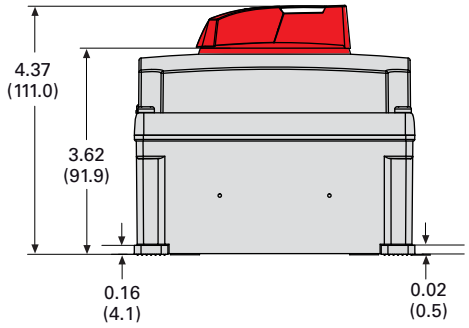

Supplied by Digital Stout Innovation & Trading FZE

Proof #5 — Zoltun Design — 4/11/22